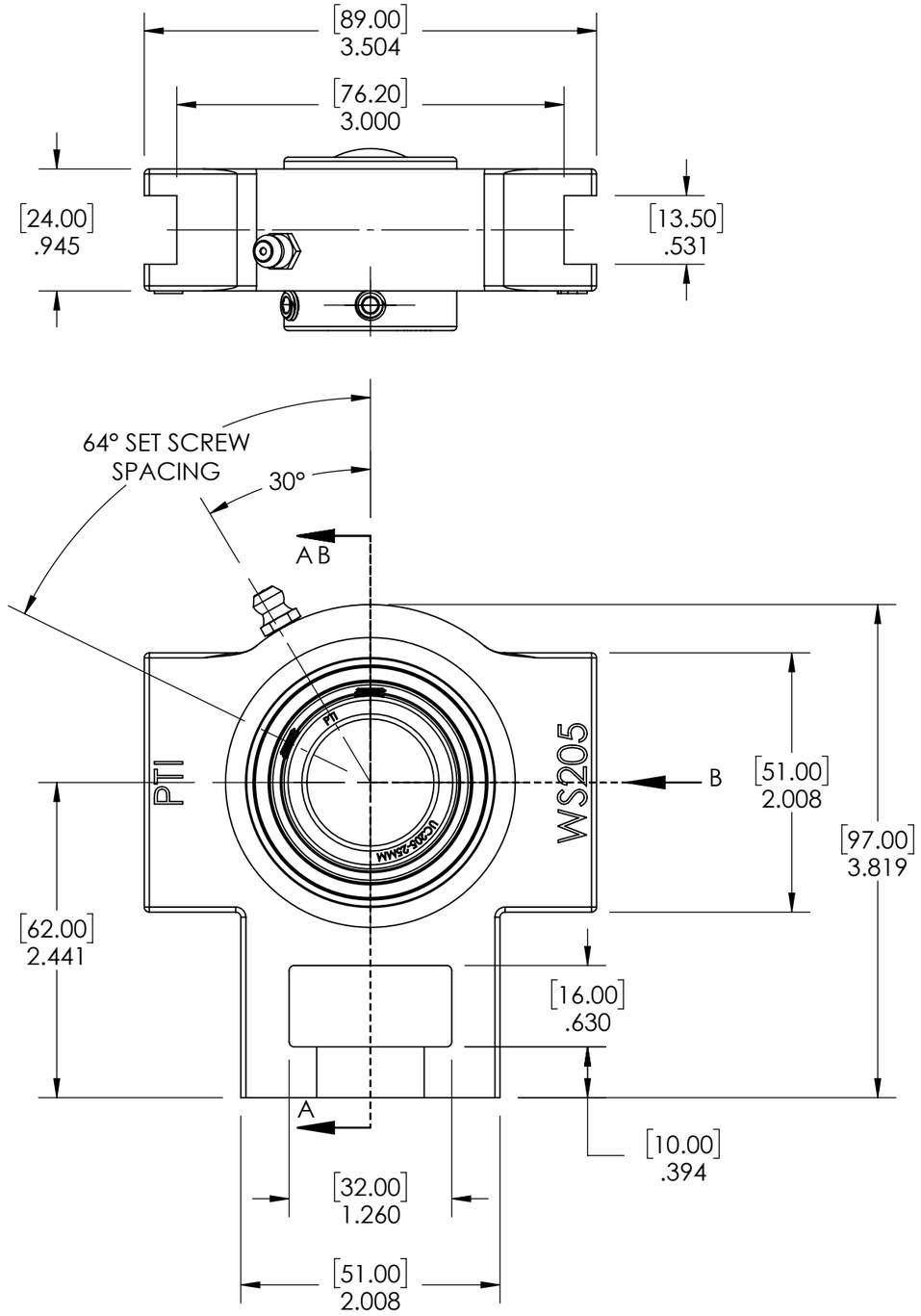

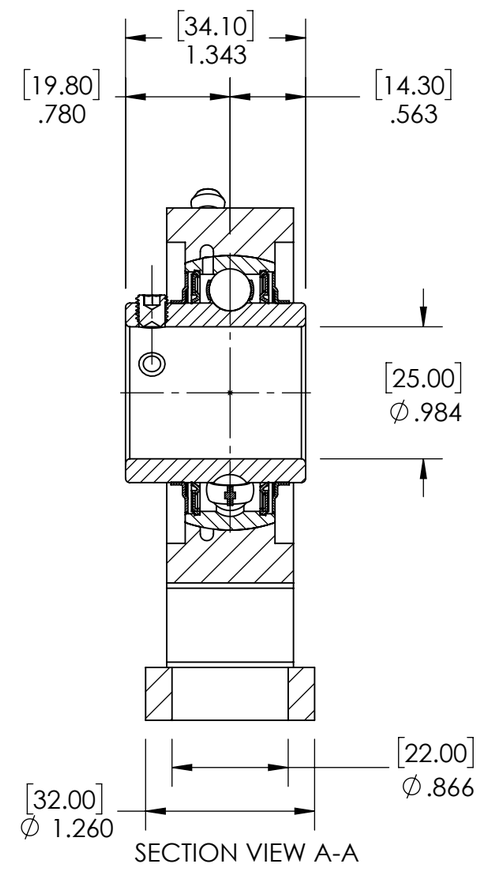

SECTION VIEW A-A

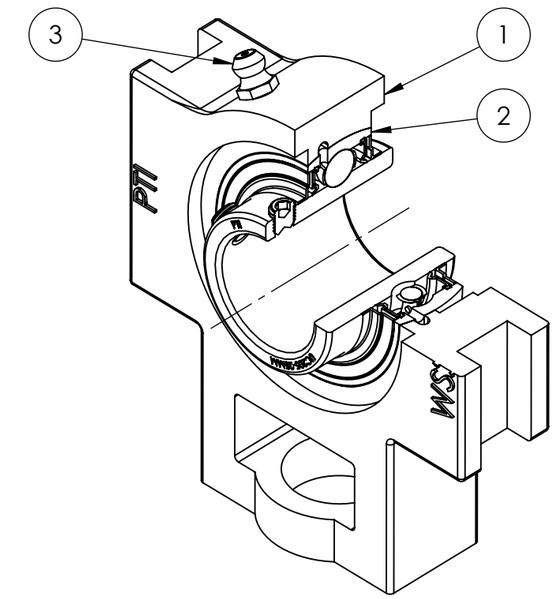

ITEM NO.	PART NUMBER	MATERIAL	COATING	QTY.
3	M6 ZERK	STEEL	ZINC PLATED	1
2	UC205-25MM	BEARING STEEL	N/A	1
1	WS205	CAST IRON	POWDER COAT	1

DATE	BY	REVISION DESCRIPTION	REV

ITEM DESCRIPTION:

WS205-25UMM

SCALE 1:12

REV -

SPECIFICATIONS	
UNITS:	IN [mm]
LOAD RATINGS	C: 3,140 LBS Co: 1,750 LBS
SPEED RATING	6250 RPM
GREASE TYPE	NLGI #2
GREASE FILL	40%
OPERATING TEMP	10°F - 200°F
SEAL TYPE	B-TYPE
INTERNAL CLEARANCE	C3
TORQUE SETTING ON SET SCREWS	

SOLVE INDUSTRIAL MOTION GROUP

SIZE B

PTI

DWG. NO.

WEIGHT	1.74 LBS	
MATERIAL	SEE BOM	
COATING	SEE BOM	
DRAWN	SEC	12/26/2024
CHECKED	SEC	01/07/2025
APPROVED		
THIRD ANGLE PROJECTION		

PROPRIETARY AND CONFIDENTIAL

THE INFORMATION CONTAINED IN THIS DRAWING IS THE SOLE PROPERTY OF Solve IMG. ANY REPRODUCTION IN PART OR AS A WHOLE WITHOUT THE WRITTEN PERMISSION OF Solve IMG IS PROHIBITED.