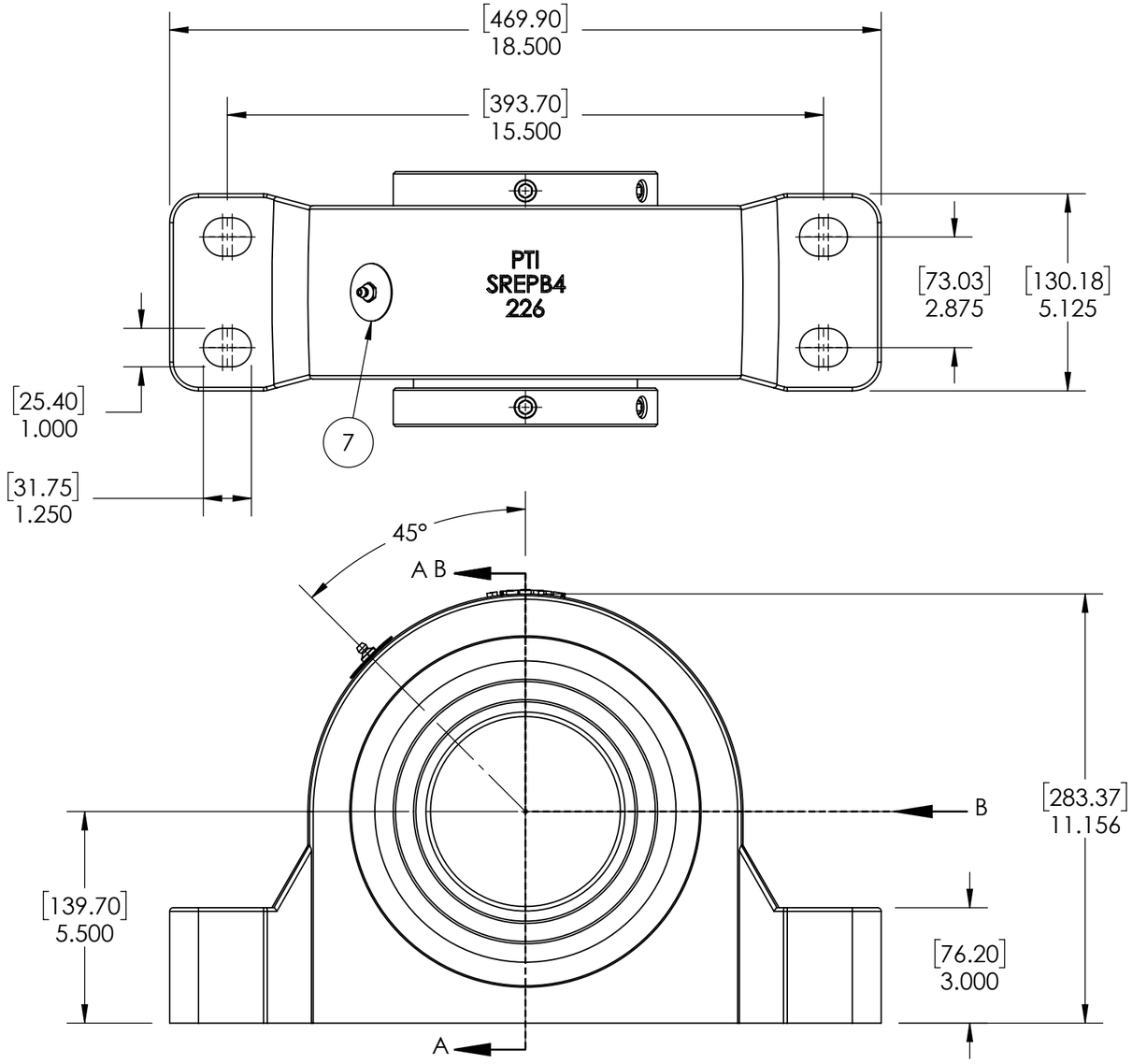

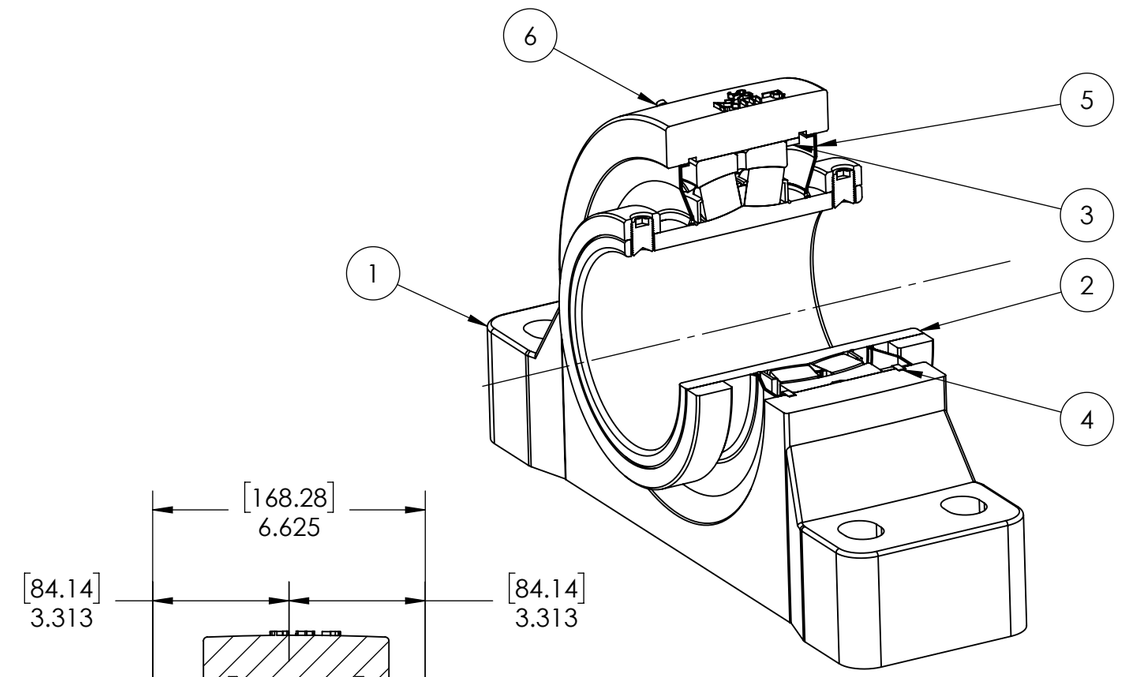

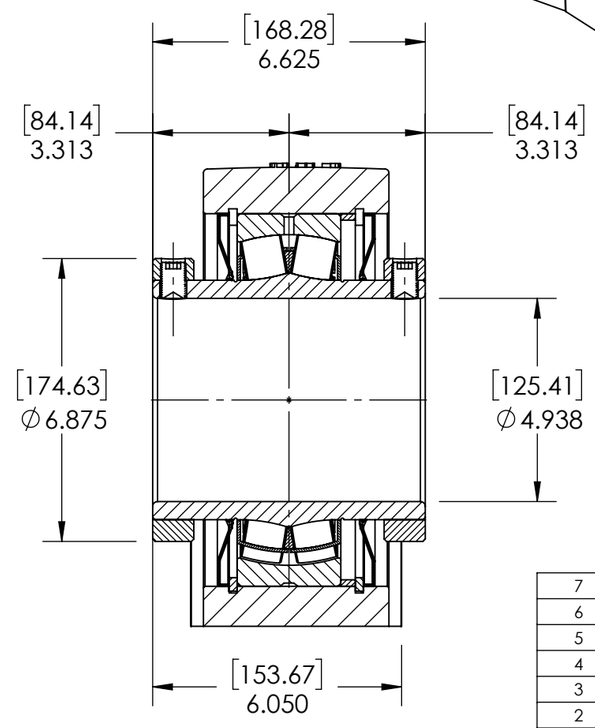

SECTION VIEW A-A

ITEM NO.	PART NUMBER	MATERIAL	COATING	QTY.
7	NP-SRE-NE	STEEL	N/A	1
6	1_8-27 ZERK	STEEL	ZINC PLATED	1
5	R3-476226	HNBR	N/A	2
4	OH230	STEEL	N/A	2
3	SR-FR230X9	STEEL	N/A	1
2	476226-415VSB	BEARING STEEL	N/A	1
1	SREPB4-226	DUCTILE IRON	POWDER COAT	1

SPECIFICATIONS	
UNITS	IN [mm]
LOAD RATINGS C	128140LBS
LOAD RATINGS Co	185470LBS
SPEED RATING	900 RPM
GREASE TYPE	NLGI #2
GREASE FILL	40-60%
OPERATING TEMP	-22°F - 290°F
SET SCREW SIZE	5/8-18UNF-7/8
SET SCREW TORQUE	1325 IN-LBS
SET SCREW AXIAL RETENTION	1200 LBS

SOLVE INDUSTRIAL MOTION GROUP

SIZE B

PTI

DWG. NO.

WEIGHT	120.07 LBS	
MATERIAL	SEE BOM	
COATING	SEE BOM	
DRAWN	SEC	03/19/2025
CHECKED	FP	04/15/2025
APPROVED		
THIRD ANGLE PROJECTION		

PROPRIETARY AND CONFIDENTIAL
THE INFORMATION CONTAINED IN THIS DRAWING IS THE SOLE PROPERTY OF Solve IMG. ANY REPRODUCTION IN PART OR AS A WHOLE WITHOUT THE WRITTEN PERMISSION OF Solve IMG IS PROHIBITED.

DATE	BY	REVISION DESCRIPTION	REV

ITEM DESCRIPTION:

SRE-PB4-415R3NE

SCALE 1:6

REV -