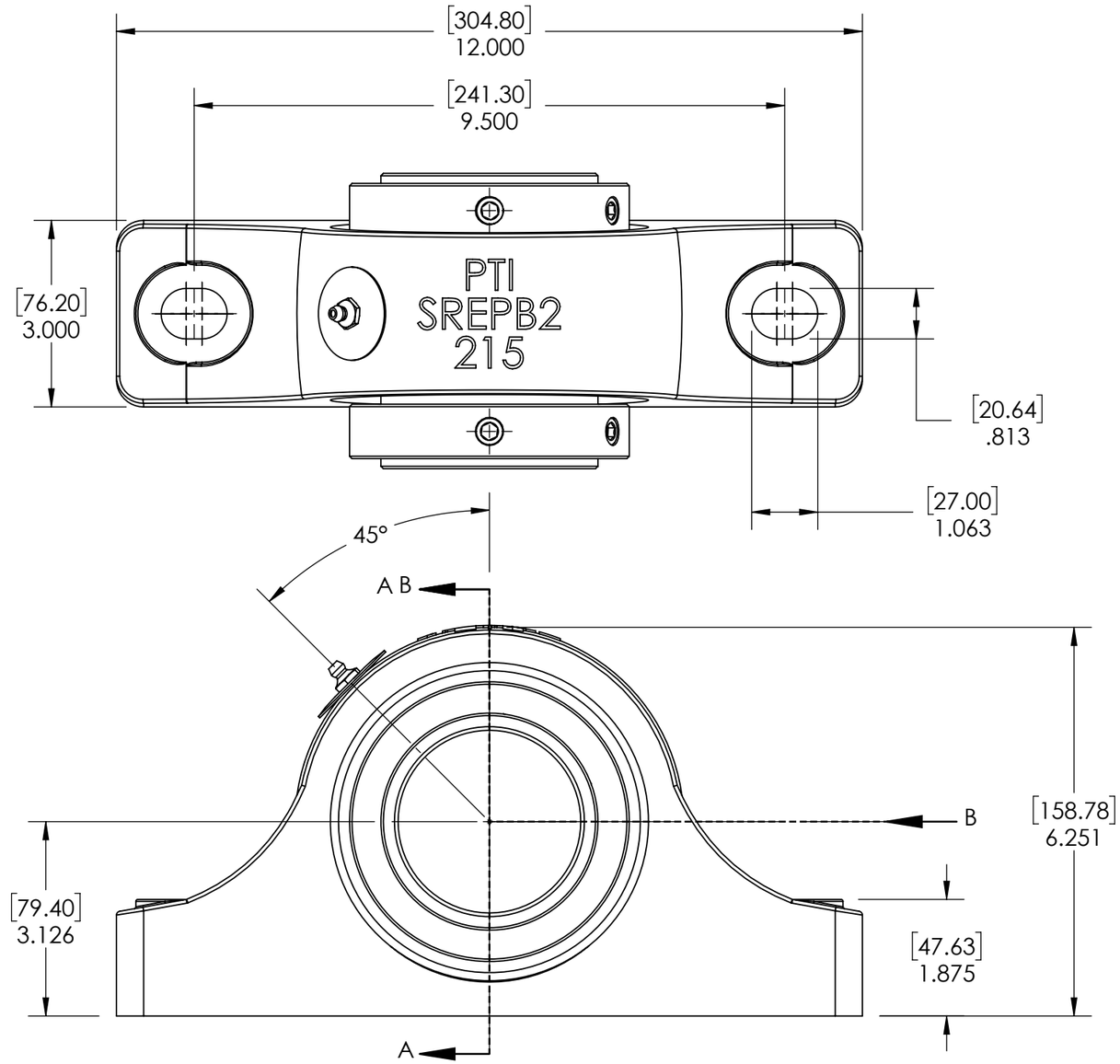

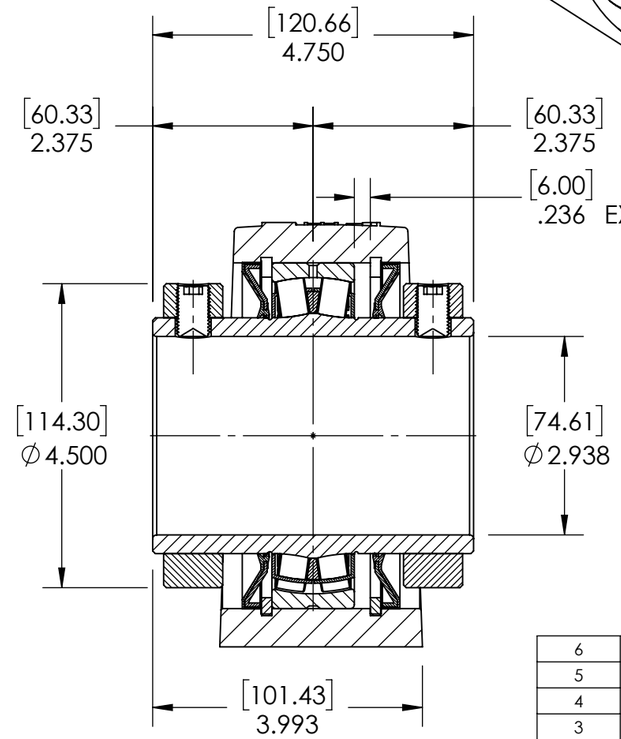

SECTION VIEW A-A

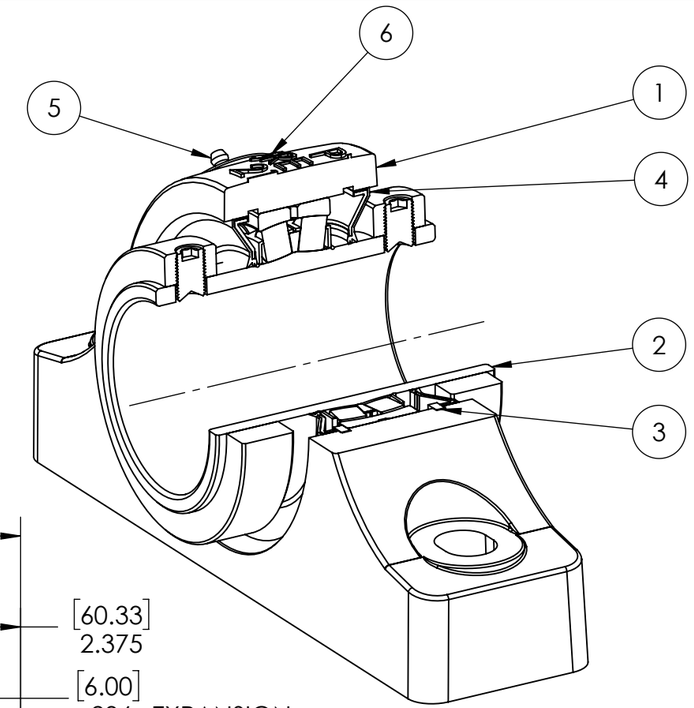

ITEM NO.	PART NUMBER	MATERIAL	COATING	QTY.
6	NP-SRE-EX	STEEL	N/A	1
5	1_8-27 ZERK	STEEL	ZINC PLATED	1
4	R3-476215	HNBR	N/A	2
3	OH130	STEEL	N/A	2
2	476215-215VSB	BEARING STEEL	N/A	1
1	SREPB2-215	DUCTILE IRON	POWDER COAT	1

DATE	BY	REVISION DESCRIPTION	REV

SPECIFICATIONS		
UNITS		IN [mm]
LOAD RATINGS	C	41590 LBS
	Co	52830 LBS
SPEED RATING		1500 RPM
GREASE TYPE		NLGI #2
GREASE FILL		40-60%
OPERATING TEMP		-22°F - 290°F
SET SCREW SIZE		1/2-20UNF-3/4
SET SCREW TORQUE		620 IN-LBS
SET SCREW AXIAL RETENTION		900 LBS

SOLVE INDUSTRIAL MOTION GROUP

SIZE B

PTI

DWG. NO.

WEIGHT	28.60 LBS	
MATERIAL	SEE BOM	
COATING	SEE BOM	
DRAWN	SEC	03/17/2025
CHECKED	FP	04/16/2025
APPROVED		
THIRD ANGLE PROJECTION		

PROPRIETARY AND CONFIDENTIAL
THE INFORMATION CONTAINED IN THIS DRAWING IS THE SOLE PROPERTY OF Solve IMG . ANY REPRODUCTION IN PART OR AS A WHOLE WITHOUT THE WRITTEN PERMISSION OF Solve IMG IS PROHIBITED.

ITEM DESCRIPTION:

SRE-PB2-215R3XP-DC

SCALE 1:9

REV -