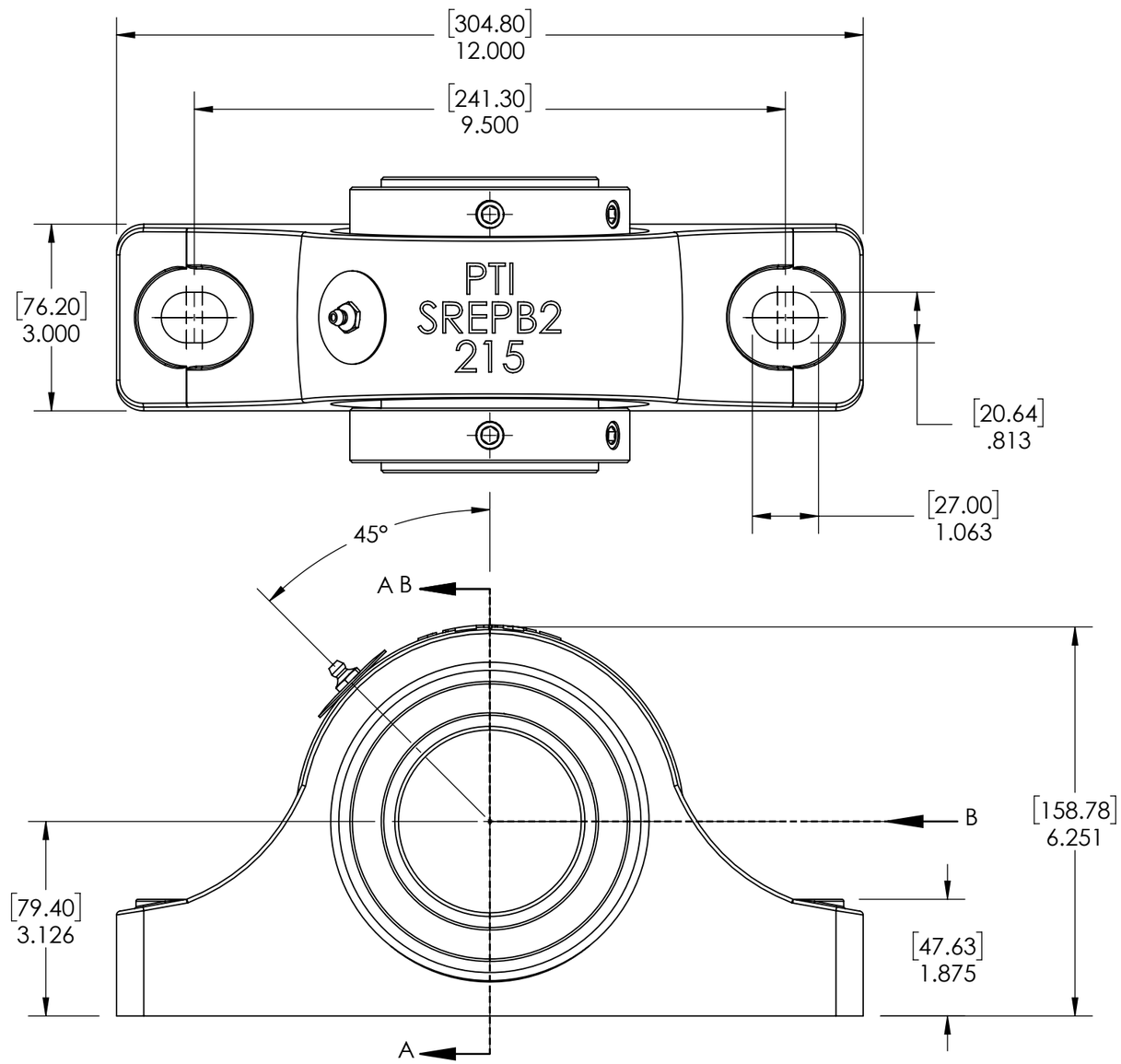


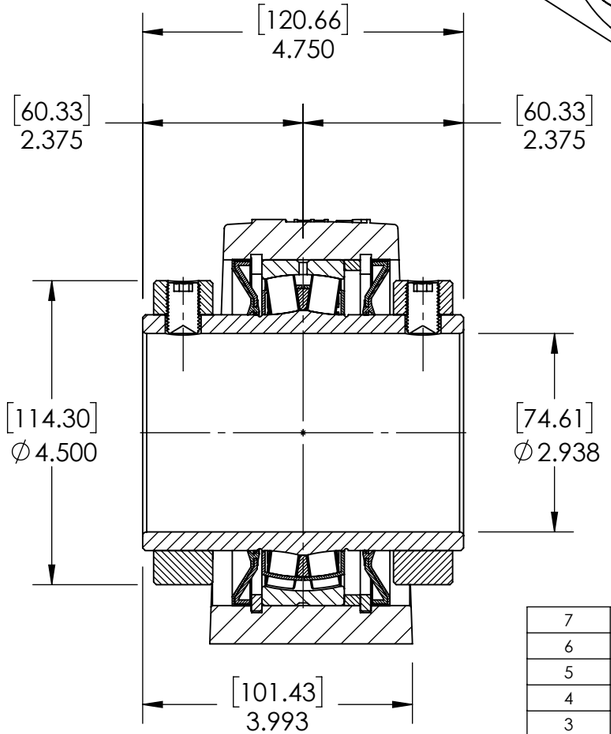


SECTION VIEW A-A

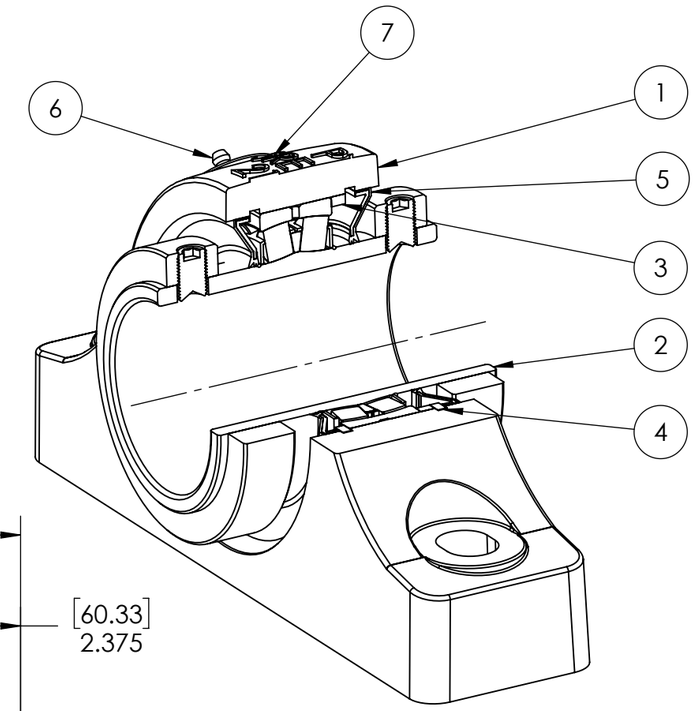


| ITEM NO. | PART NUMBER | MATERIAL | COATING | QTY. |
|---|---|---|---|---|
| 7 | NP-SRE-NE | STEEL | N/A | 1 |
| 6 | 1_8-27 ZERK | STEEL | ZINC PLATED | 1 |
| 5 | R3-476215 | HNBR | N/A | 2 |
| 4 | OH130 | STEEL | N/A | 2 |
| 3 | SR-FR130X6 | STEEL | N/A | 1 |
| 2 | 476215-215VSB | BEARING STEEL | N/A | 1 |
| 1 | SREPB2-215 | DUCTILE IRON | POWDER COAT | 1 |

| SPECIFICATIONS | | |
|---|---|---|
| UNITS | | IN [mm] |
| LOAD RATINGS | C | 41590 LBS |
| | Co | 52830 LBS |
| SPEED RATING | | 1500 RPM |
| GREASE TYPE | | NLGI #2 |
| GREASE FILL | | 40-60% |
| OPERATING TEMP | | -22°F - 290°F |
| SET SCREW SIZE | | 1/2-20UNF-3/4 |
| SET SCREW TORQUE | | 620 IN-LBS |
| SET SCREW AXIAL RETENTION | | 900 LBS |

SOLVE INDUSTRIAL MOTION GROUP

SIZE B

PTI

DWG. NO.

| | | |
|---|---|---|
| WEIGHT | 28.77 LBS | |
| MATERIAL | SEE BOM | |
| COATING | SEE BOM | |
| DRAWN | SEC | 03/17/2025 |
| CHECKED | FP | 04/16/2025 |
| APPROVED | | |
| THIRD ANGLE PROJECTION | | |

**PROPRIETARY AND CONFIDENTIAL**

THE INFORMATION CONTAINED IN THIS DRAWING IS THE SOLE PROPERTY OF Solve IMG. ANY REPRODUCTION IN PART OR AS A WHOLE WITHOUT THE WRITTEN PERMISSION OF Solve IMG IS PROHIBITED.

| DATE | BY | REVISION DESCRIPTION | REV |
|---|---|---|---|
| | | | |
| | | | |
| | | | |
| | | | |

ITEM DESCRIPTION:

SRE-PB2-215R3NE-DC

SCALE 1:9

REV –