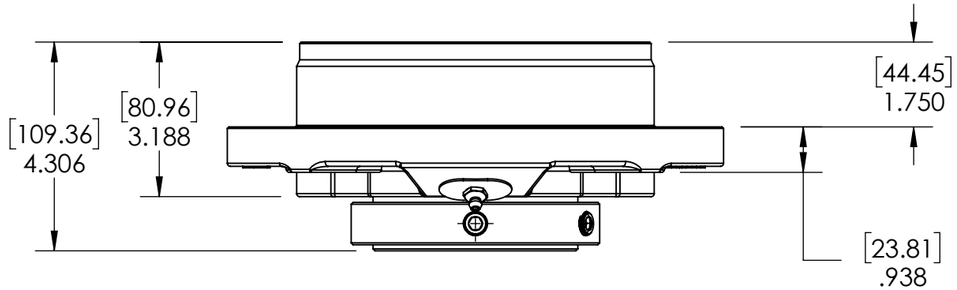

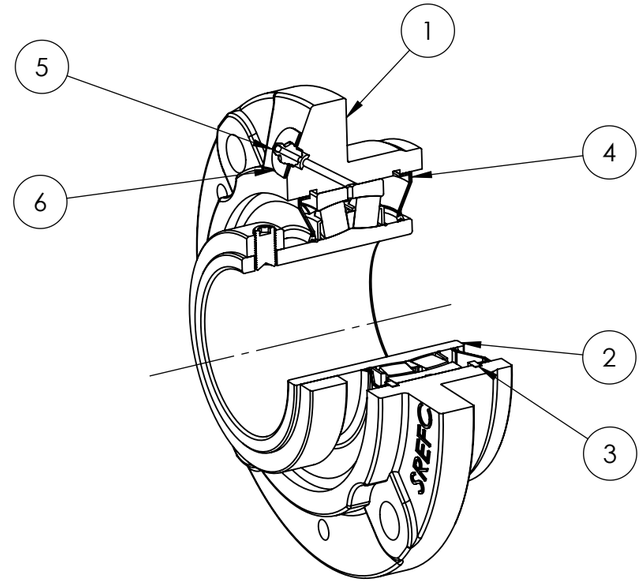

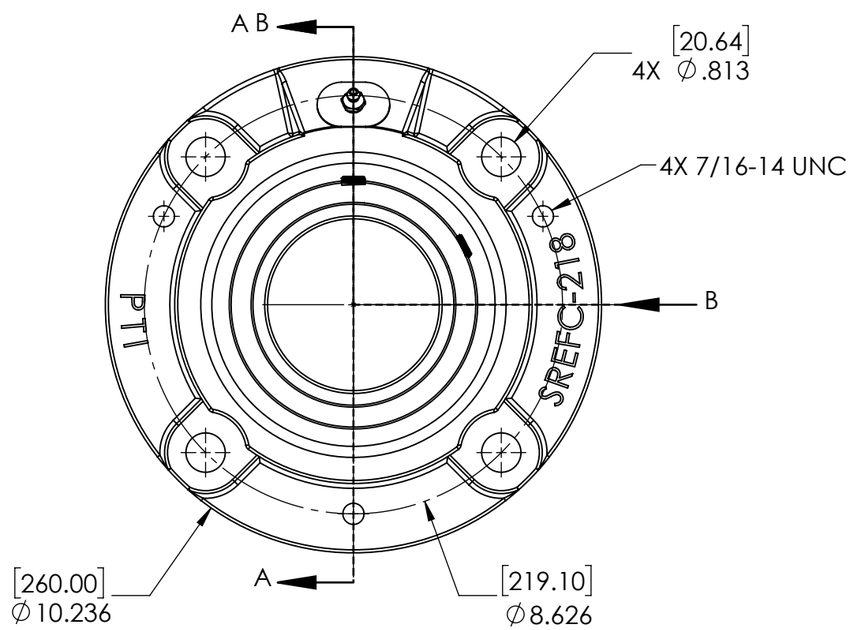

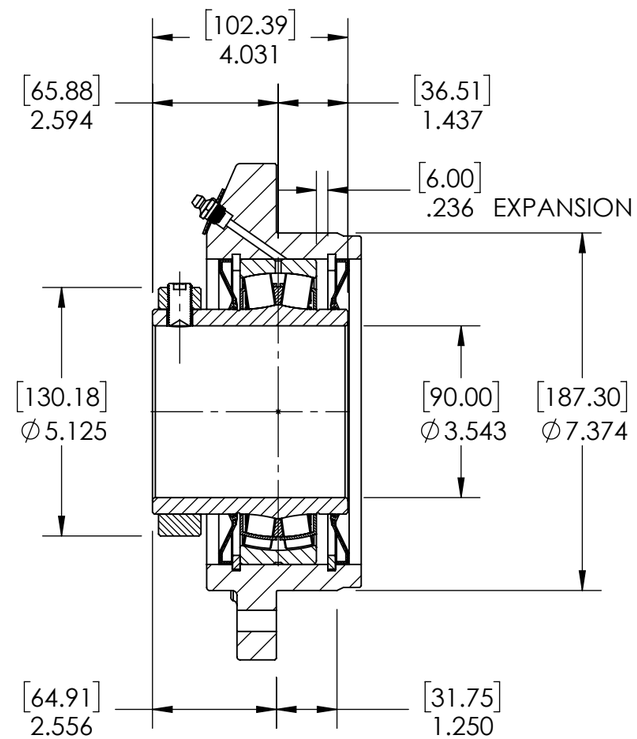

SECTION VIEW A-A

ITEM NO.	PART NUMBER	MATERIAL	COATING	QTY.
6	NPS-SRE-EX	STEEL	N/A	1
5	1_8-27 ZERK	STEEL	ZINC PLATED	1
4	R3-476218	HNBR	N/A	2
3	OH160	STEEL	N/A	2
2	476218-90MM	BEARING STEEL	N/A	1
1	SREFC-218	DUCTILE IRON	POWDER COAT	1

SPECIFICATIONS	
UNITS	IN [mm]
LOAD RATINGS C	62950 LBS
LOAD RATINGS Co	83180 LBS
SPEED RATING	1250 RPM
GREASE TYPE	NLGI #2
GREASE FILL	40-60%
OPERATING TEMP	-22°F - 290°F
SET SCREW SIZE	1/2-20UNF-7/8
SET SCREW TORQUE	620 IN-LBS
SET SCREW AXIAL RETENTION	900 LBS

SOLVE INDUSTRIAL MOTION GROUP

SIZE B

PTI

DWG. NO.

WEIGHT	30.22 LBS	
MATERIAL	SEE BOM	
COATING	SEE BOM	
DRAWN	SEC	05/05/2025
CHECKED	FP	05/05/2025
APPROVED		
THIRD ANGLE PROJECTION		

PROPRIETARY AND CONFIDENTIAL
THE INFORMATION CONTAINED IN THIS DRAWING IS THE SOLE PROPERTY OF Solve IMG. ANY REPRODUCTION IN PART OR AS A WHOLE WITHOUT THE WRITTEN PERMISSION OF Solve IMG IS PROHIBITED.

DATE	BY	REVISION DESCRIPTION	REV

ITEM DESCRIPTION:

SRE-FC-90MMR3XP

SCALE 1:8

REV -