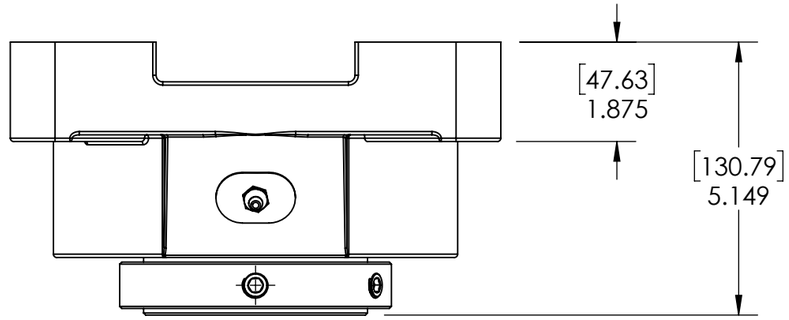

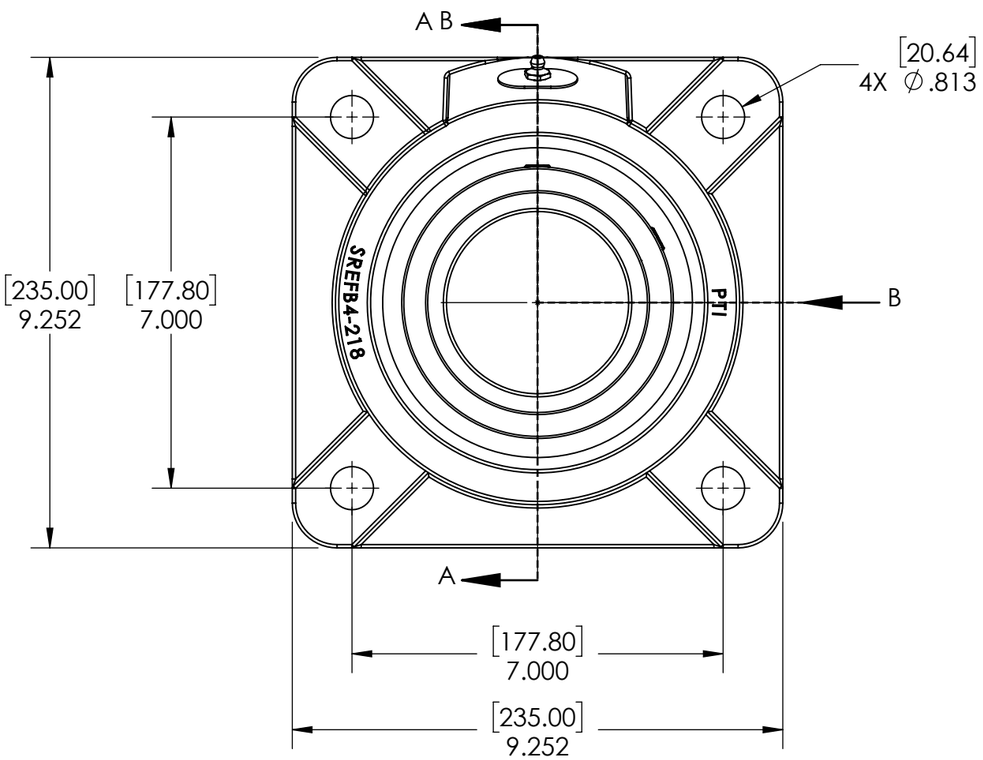

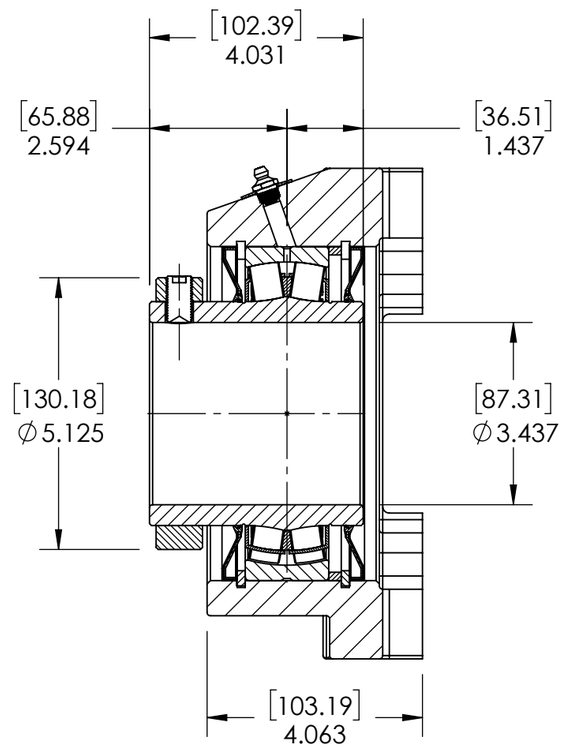

SECTION VIEW A-A

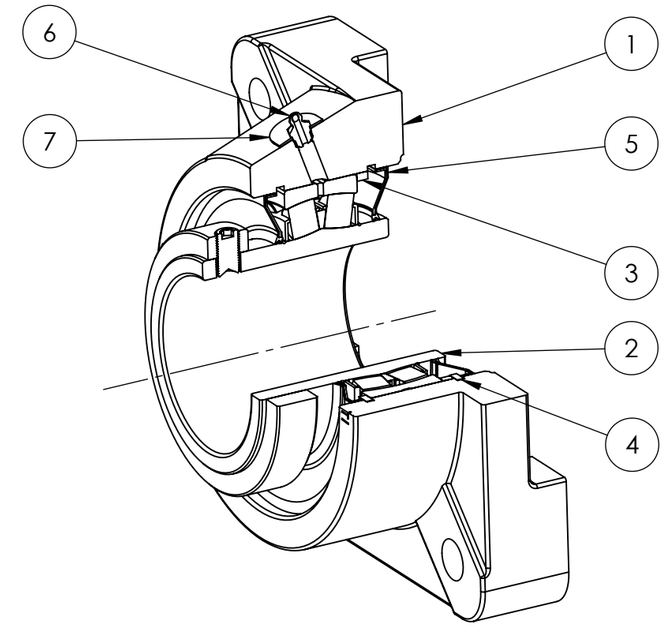

ITEM NO.	PART NUMBER	MATERIAL	COATING	QTY.
7	NPS-SRE-NE	STEEL	N/A	1
6	1_8-27 ZERK	STEEL	ZINC PLATED	1
5	R3-476218	HNBR	N/A	2
4	OH160	STEEL	N/A	2
3	SR-FR160X6	STEEL	N/A	1
2	476218-307	BEARING STEEL	N/A	1
1	SREFB4-218	DUCTILE IRON	POWDER COAT	1

SPECIFICATIONS	
UNITS	IN [mm]
LOAD RATINGS C	62950 LBS
LOAD RATINGS Co	83180 LBS
SPEED RATING	1250 RPM
GREASE TYPE	NLGI #2
GREASE FILL	40-60%
OPERATING TEMP	-22°F - 290°F
SET SCREW SIZE	1/2-20UNF-7/8
SET SCREW TORQUE	620 IN-LBS
SET SCREW AXIAL RETENTION	900 LBS

SOLVE INDUSTRIAL MOTION GROUP

SIZE B

PTI

DWG. NO.

WEIGHT	41.19 LBS	
MATERIAL	SEE BOM	
COATING	SEE BOM	
DRAWN	SEC	03/06/2025
CHECKED	FP	04/11/2025
APPROVED		
THIRD ANGLE PROJECTION		

PROPRIETARY AND CONFIDENTIAL
THE INFORMATION CONTAINED IN THIS DRAWING IS THE SOLE PROPERTY OF Solve IMG . ANY REPRODUCTION IN PART OR AS A WHOLE WITHOUT THE WRITTEN PERMISSION OF Solve IMG IS PROHIBITED.

DATE	BY	REVISION DESCRIPTION	REV

ITEM DESCRIPTION:

SRE-FB4-307R3NE

SCALE 1:9

REV -