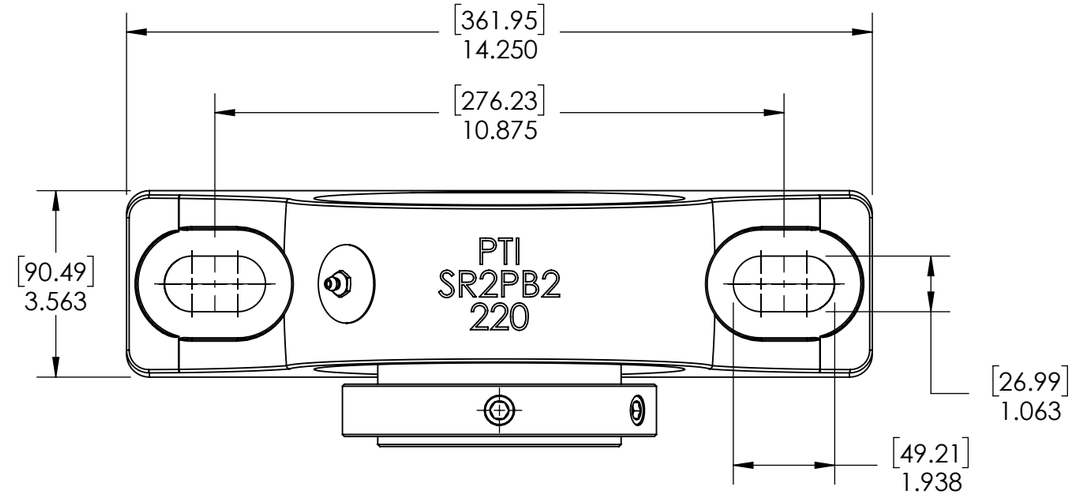

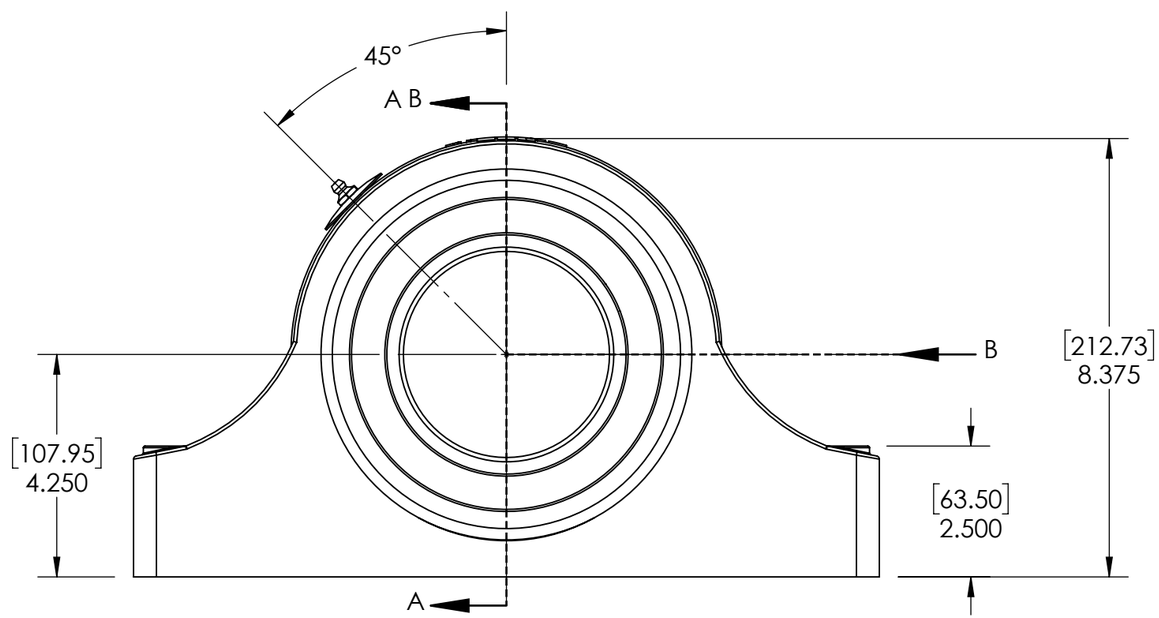

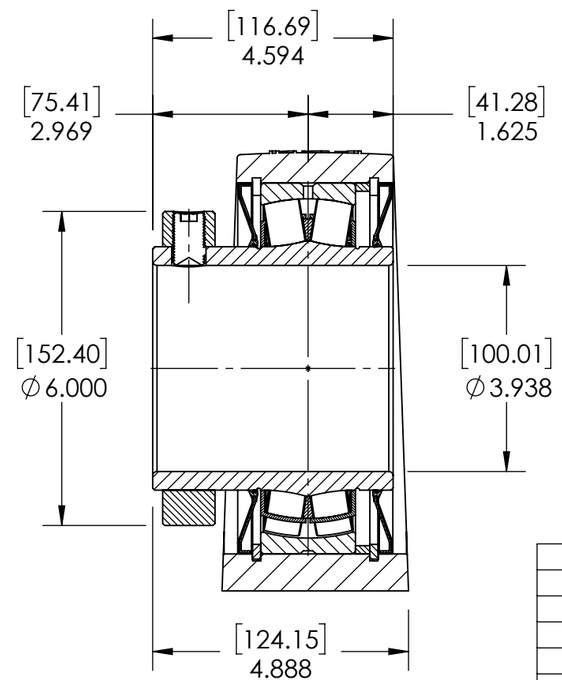

SECTION VIEW A-A

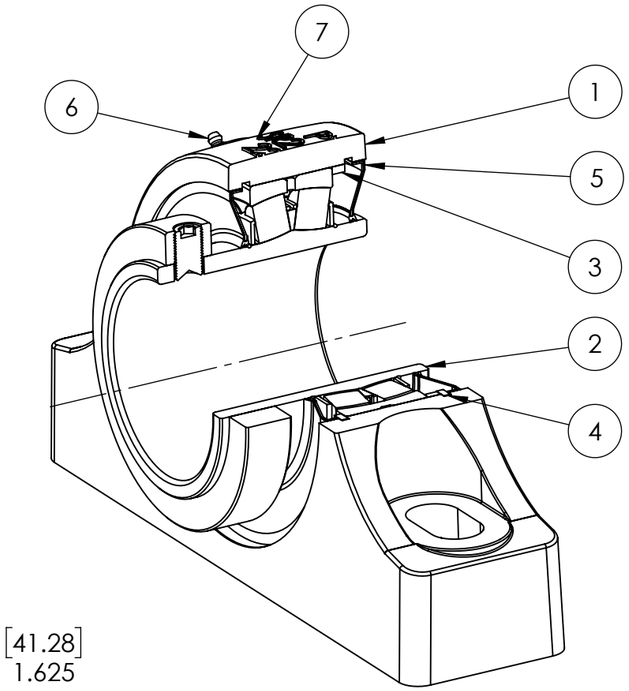

ITEM NO.	PART NUMBER	MATERIAL	COATING	QTY.
7	NP-SR2-NE	STEEL	N/A	1
6	1_8-27 ZERK	STEEL	ZINC PLATED	1
5	R3-476220	HNBR	N/A	2
4	OH180	STEEL	N/A	2
3	SR-FR180X7	STEEL	N/A	1
2	476220-315	BEARING STEEL	N/A	1
1	SR2PB2-220	DUCTILE IRON	POWDER COAT	1

SPECIFICATIONS		
UNITS		IN [mm]
LOAD RATINGS	C	84300 LBS
	Co	112400LBS
SPEED RATING		1100 RPM
GREASE TYPE		NLGI #2
GREASE FILL		40-60%
OPERATING TEMP		-22°F - 290°F
SET SCREW SIZE		5/8-18UNF-1
SET SCREW TORQUE		1325 IN-LBS
SET SCREW AXIAL RETENTION		1200 LBS

SOLVE INDUSTRIAL MOTION GROUP

SIZE B

PTI

DWG. NO.

WEIGHT	49.17 LBS	
MATERIAL	SEE BOM	
COATING	SEE BOM	
DRAWN	SEC	03/12/2025
CHECKED	FP	04/15/2025
APPROVED		
THIRD ANGLE PROJECTION		

PROPRIETARY AND CONFIDENTIAL

THE INFORMATION CONTAINED IN THIS DRAWING IS THE SOLE PROPERTY OF Solve IMG. ANY REPRODUCTION IN PART OR AS A WHOLE WITHOUT THE WRITTEN PERMISSION OF Solve IMG IS PROHIBITED.

DATE	BY	REVISION DESCRIPTION	REV

ITEM DESCRIPTION:

SR2-PB2-315R3NE

SCALE 1:8

REV -