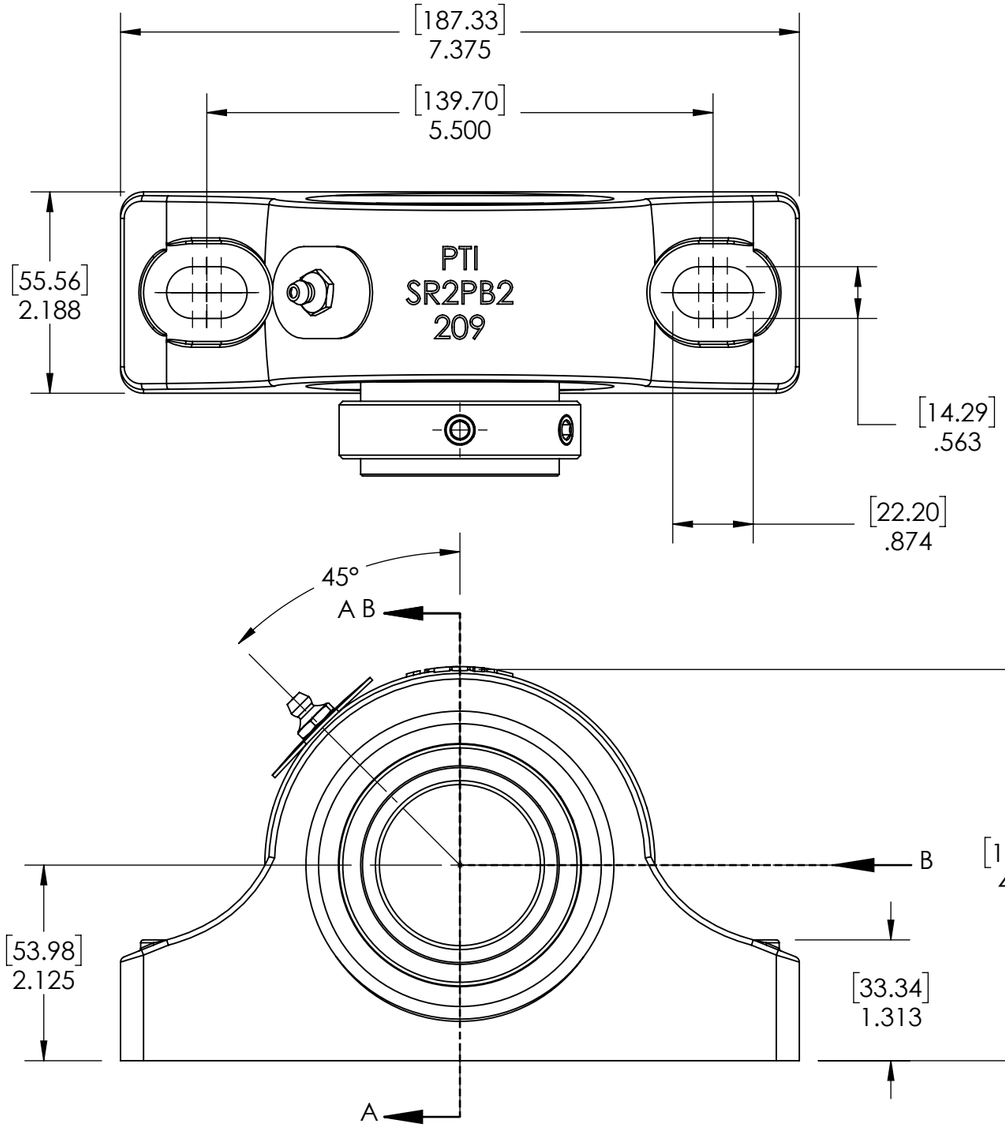

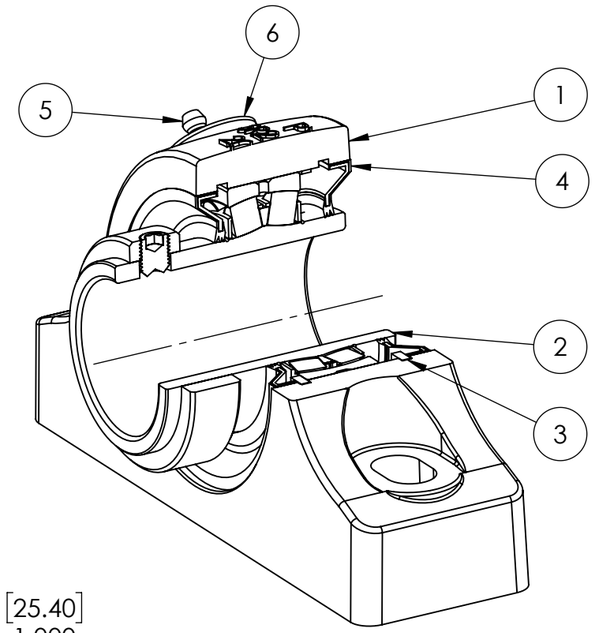

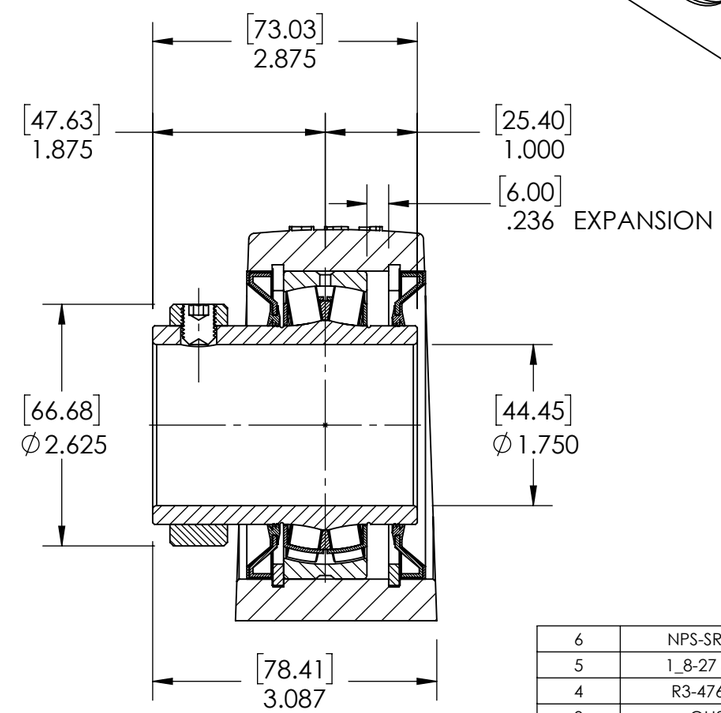

SECTION VIEW A-A

ITEM NO.	PART NUMBER	MATERIAL	COATING	QTY.
6	NPS-SR2-EX	STEEL	N/A	1
5	1_8-27 ZERK	STEEL	ZINC PLATED	1
4	R3-476209	HNBR	N/A	2
3	OH85	STEEL	N/A	2
2	476209-112	BEARING STEEL	N/A	1
1	SR2PB2-209	DUCTILE IRON	POWDER COAT	1

SPECIFICATIONS	
UNITS	IN [mm]
LOAD RATINGS C	17980 LBS
Co	21360 LBS
SPEED RATING	2425 RPM
GREASE TYPE	NLGI #2
GREASE FILL	40-60%
OPERATING TEMP	-22°F - 290°F
SET SCREW SIZE	3/8-24UNF-1/2
SET SCREW TORQUE	250 IN-LBS
SET SCREW AXIAL RETENTION	515 LBS

SOLVE INDUSTRIAL MOTION GROUP

SIZE B

PTI

DWG. NO.

WEIGHT	8.32 LBS	
MATERIAL	SEE BOM	
COATING	SEE BOM	
DRAWN	SEC	03/18/2025
CHECKED	FP	04/15/2025
APPROVED		
THIRD ANGLE PROJECTION		

PROPRIETARY AND CONFIDENTIAL
THE INFORMATION CONTAINED IN THIS DRAWING IS THE SOLE PROPERTY OF Solve IMG . ANY REPRODUCTION IN PART OR AS A WHOLE WITHOUT THE WRITTEN PERMISSION OF Solve IMG IS PROHIBITED.

DATE	BY	REVISION DESCRIPTION	REV

ITEM DESCRIPTION:

SR2-PB2-112R3XP

SCALE 1:14

REV -