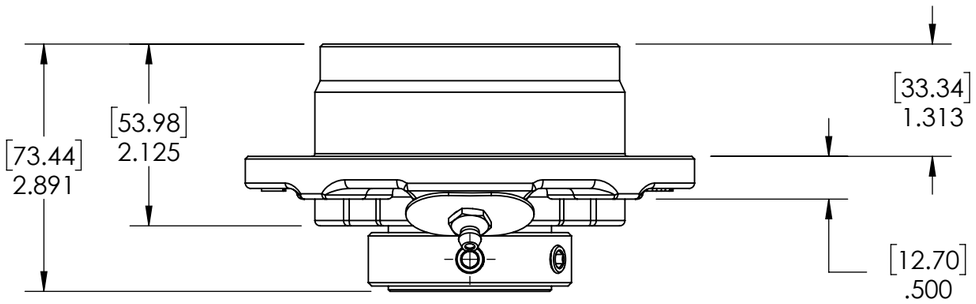

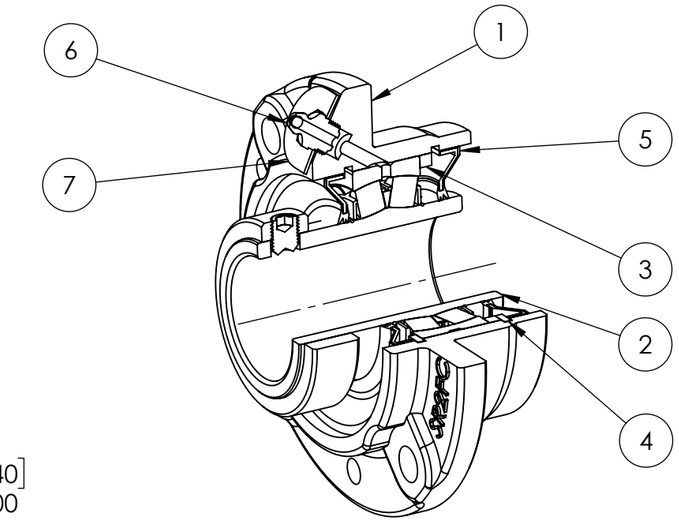

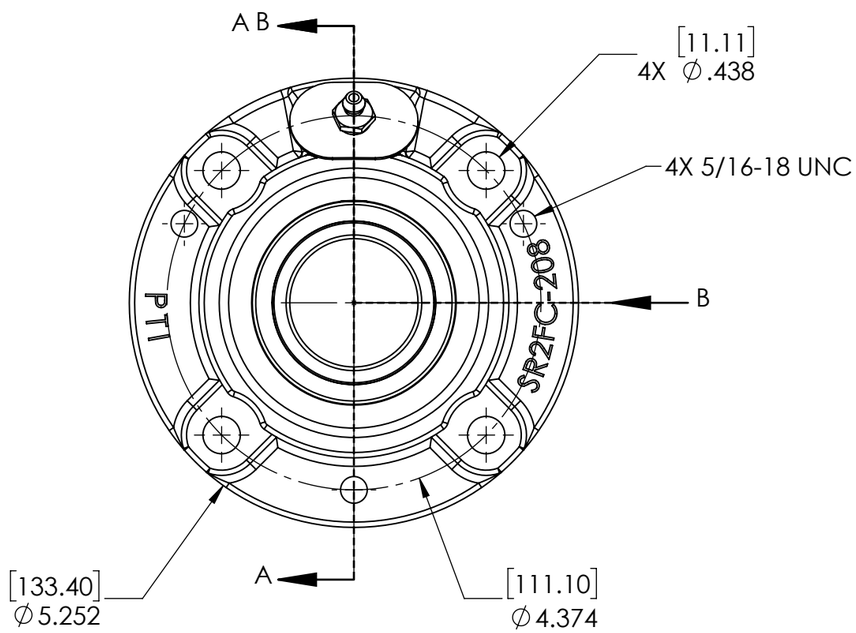

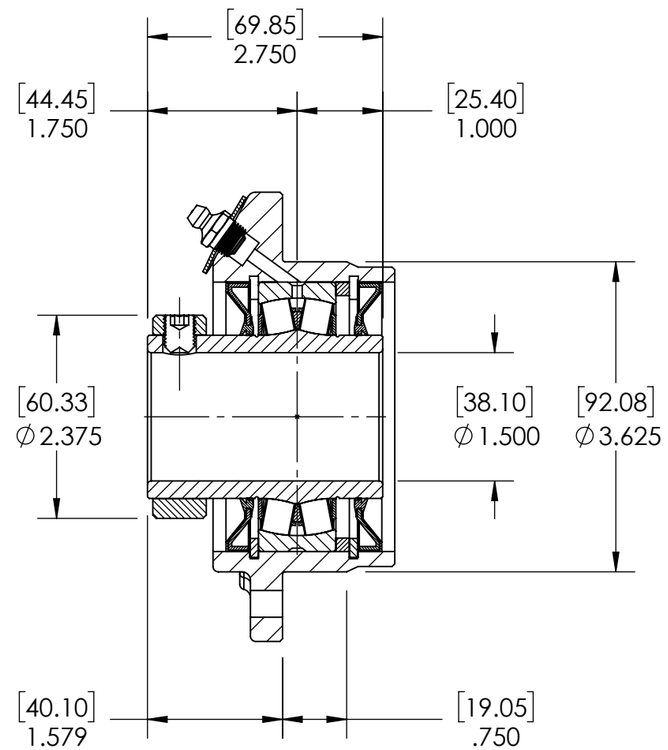

SECTION VIEW A-A

ITEM NO.	PART NUMBER	MATERIAL	COATING	QTY.
7	NPS-SR2-NE	STEEL	N/A	1
6	1_8-27 ZERK	STEEL	ZINC PLATED	1
5	R3-476208	HNBR	N/A	2
4	OH80	STEEL	N/A	2
3	SR-FR80X4	STEEL	N/A	1
2	476208-108	BEARING STEEL	N/A	1
1	SR2FC-208	DUCTILE IRON	POWDER COAT	1

SPECIFICATIONS		
UNITS		IN [mm]
LOAD RATINGS	C	17540 LBS
	Co	20230 LBS
SPEED RATING		2750 RPM
GREASE TYPE		NLGI #2
GREASE FILL		40-60%
OPERATING TEMP		-22°F - 290°F
SET SCREW SIZE		3/8-24UNF-1/2
SET SCREW TORQUE		250 IN-LBS
SET SCREW AXIAL RETENTION		515 LBS

SOLVE INDUSTRIAL MOTION GROUP

SIZE B

PTI

DWG. NO.

WEIGHT	4.82 LBS	
MATERIAL	SEE BOM	
COATING	SEE BOM	
DRAWN	SEC	03/14/2025
CHECKED	FP	05/05/2025
APPROVED		
THIRD ANGLE PROJECTION		

PROPRIETARY AND CONFIDENTIAL
THE INFORMATION CONTAINED IN THIS DRAWING IS THE SOLE PROPERTY OF Solve IMG . ANY REPRODUCTION IN PART OR AS A WHOLE WITHOUT THE WRITTEN PERMISSION OF Solve IMG IS PROHIBITED.

DATE	BY	REVISION DESCRIPTION	REV

ITEM DESCRIPTION:

SR2-FC-108R3NE

SCALE 1:15

REV -