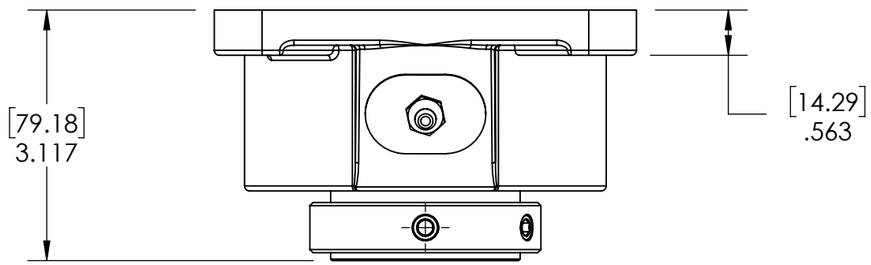

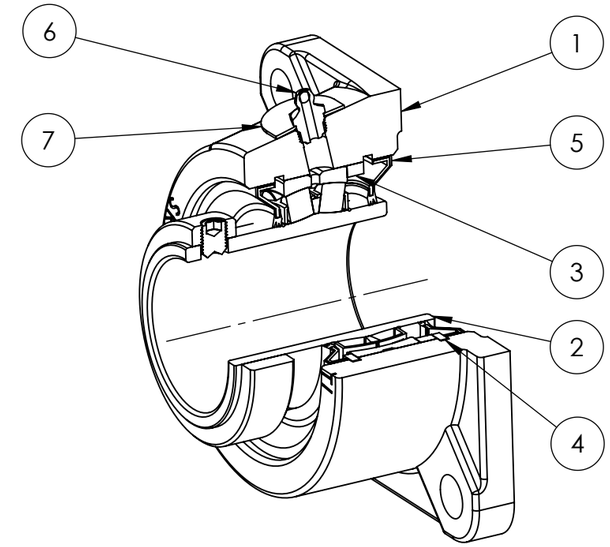

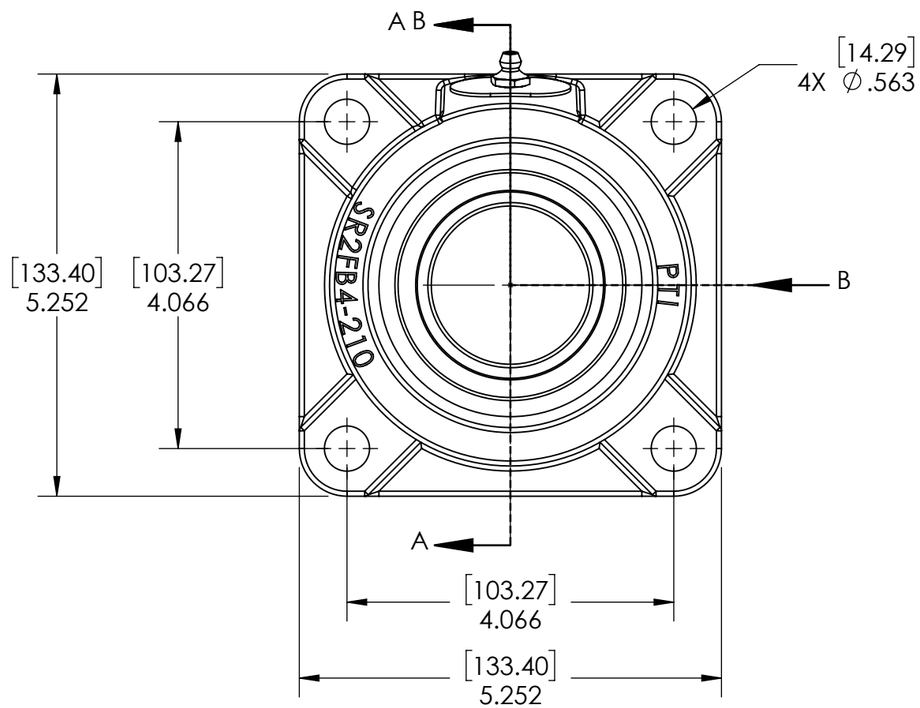

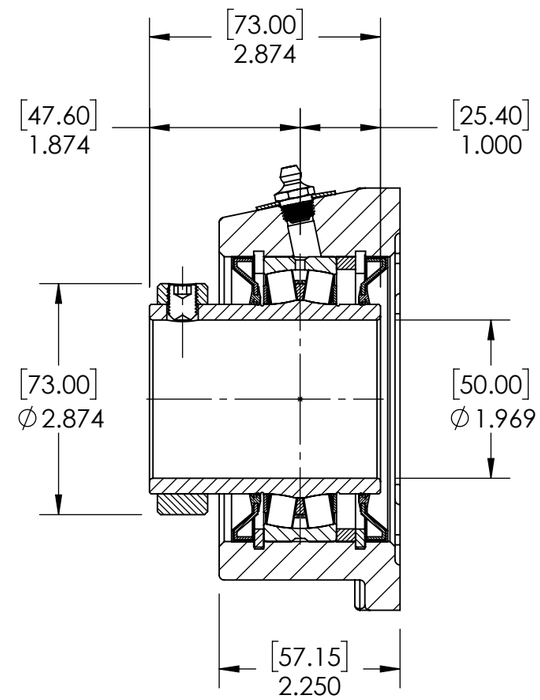

SECTION VIEW A-A

ITEM NO.	PART NUMBER	MATERIAL	COATING	QTY.
7	NPS-SR2-NE	STEEL	N/A	1
6	1_8-27 ZERK	STEEL	ZINC PLATED	1
5	R3-476210	HNBR	N/A	2
4	OH90	STEEL	N/A	2
3	SR-FR90X6	STEEL	N/A	1
2	476210-50MM	BEARING STEEL	N/A	1
1	SR2FB4-210	DUCTILE IRON	POWDER COAT	1

SPECIFICATIONS	
UNITS	IN [mm]
LOAD RATINGS C	20230 LBS
Co	24730 LBS
SPEED RATING	2225 RPM
GREASE TYPE	NLGI #2
GREASE FILL	40-60%
OPERATING TEMP	-22°F - 290°F
SET SCREW SIZE	3/8-24UNF-1/2
SET SCREW TORQUE	250 IN-LBS
SET SCREW AXIAL RETENTION	515 LBS

SOLVE INDUSTRIAL MOTION GROUP

SIZE B

PTI

DWG. NO.

WEIGHT	7.75 LBS	
MATERIAL	SEE BOM	
COATING	SEE BOM	
DRAWN	SEC	03/12/2025
CHECKED	FP	04/11/2025
APPROVED		
THIRD ANGLE PROJECTION		

PROPRIETARY AND CONFIDENTIAL
THE INFORMATION CONTAINED IN THIS DRAWING IS THE SOLE PROPERTY OF Solve IMG. ANY REPRODUCTION IN PART OR AS A WHOLE WITHOUT THE WRITTEN PERMISSION OF Solve IMG IS PROHIBITED.

DATE	BY	REVISION DESCRIPTION	REV

ITEM DESCRIPTION:

SR2-FB4-50MMR3NE

SCALE 1:15

REV -