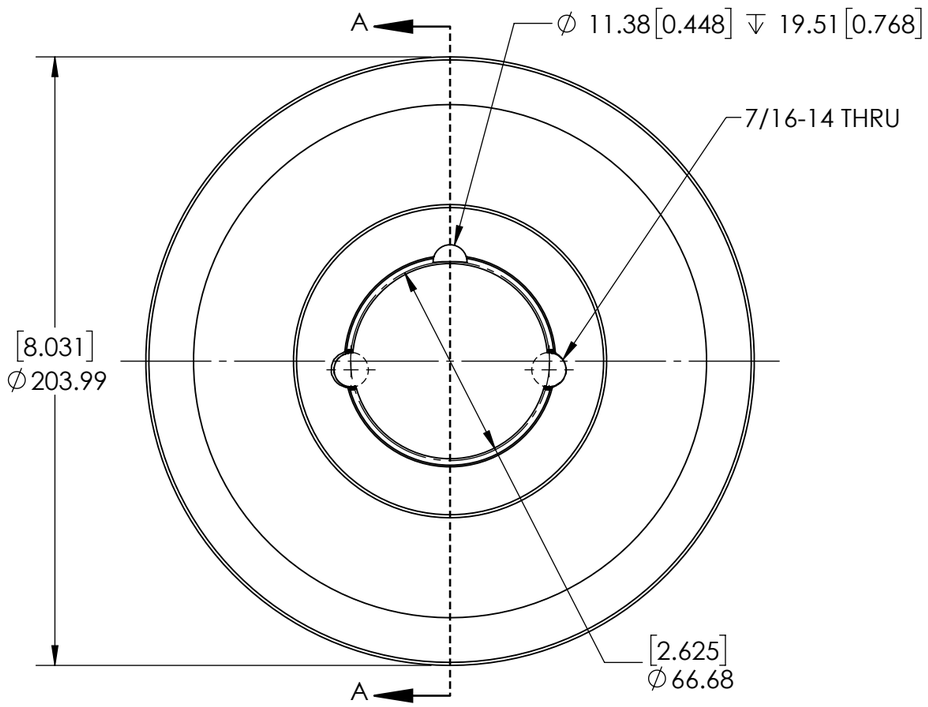

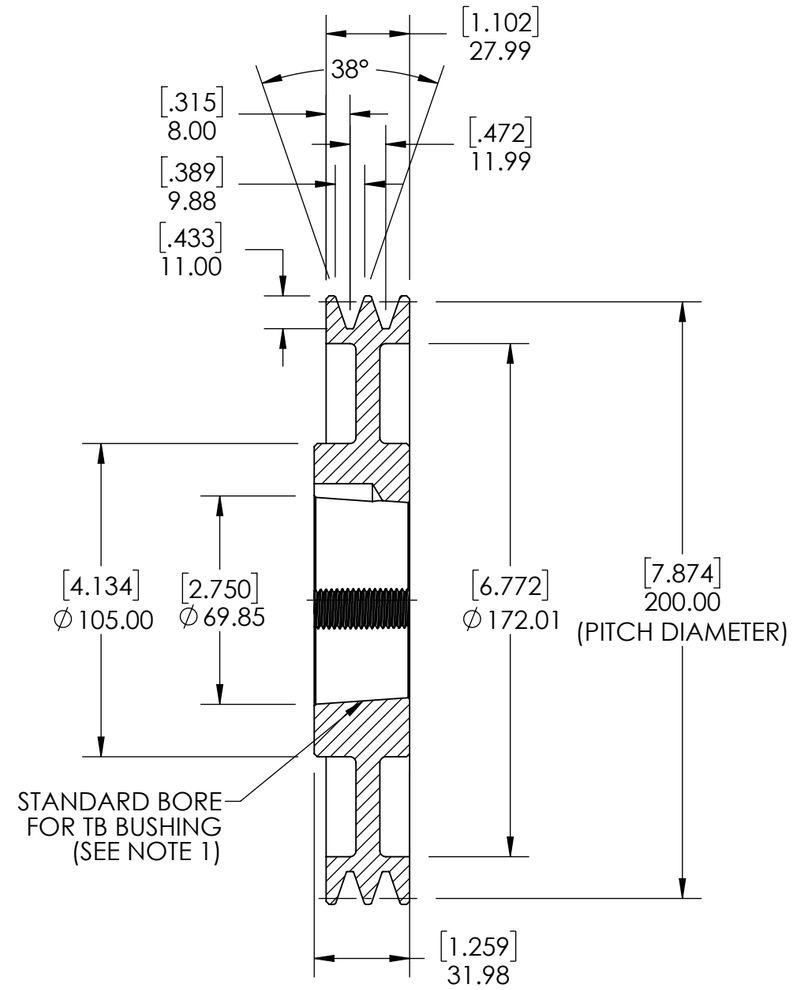

SECTION A-A

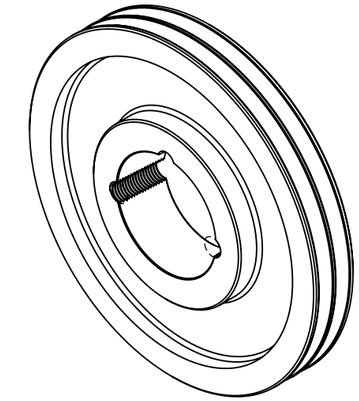

NOTES:
1. TB BUSHING SIZE: 2012
2. UNITS: mm [INCHES].

WEIGHT	3.29 KG		
MATERIAL	CAST IRON		
COATING	GREY PAINT		
DRAWN	MTC	08/29/2025	
CHECKED	PT	09/02/2025	
APPROVED			
THIRD ANGLE PROJECTION			

SOLVE INDUSTRIAL MOTION GROUP

SIZE B

PTI

DWG. NO.

PROPRIETARY AND CONFIDENTIAL
THE INFORMATION CONTAINED IN THIS DRAWING IS THE SOLE PROPERTY OF Solve IMG . ANY REPRODUCTION IN PART OR AS A WHOLE WITHOUT THE WRITTEN PERMISSION OF Solve IMG IS PROHIBITED.

DATE	BY	REVISION DESCRIPTION	REV

ITEM DESCRIPTION:

SPZ200X2-2012

SCALE 1:2

REV -