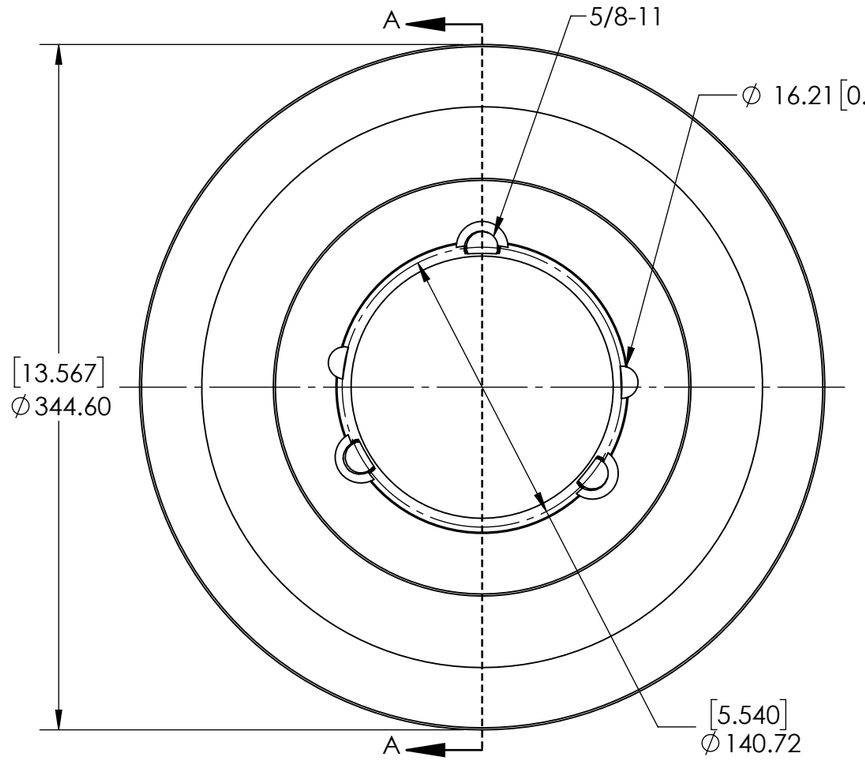

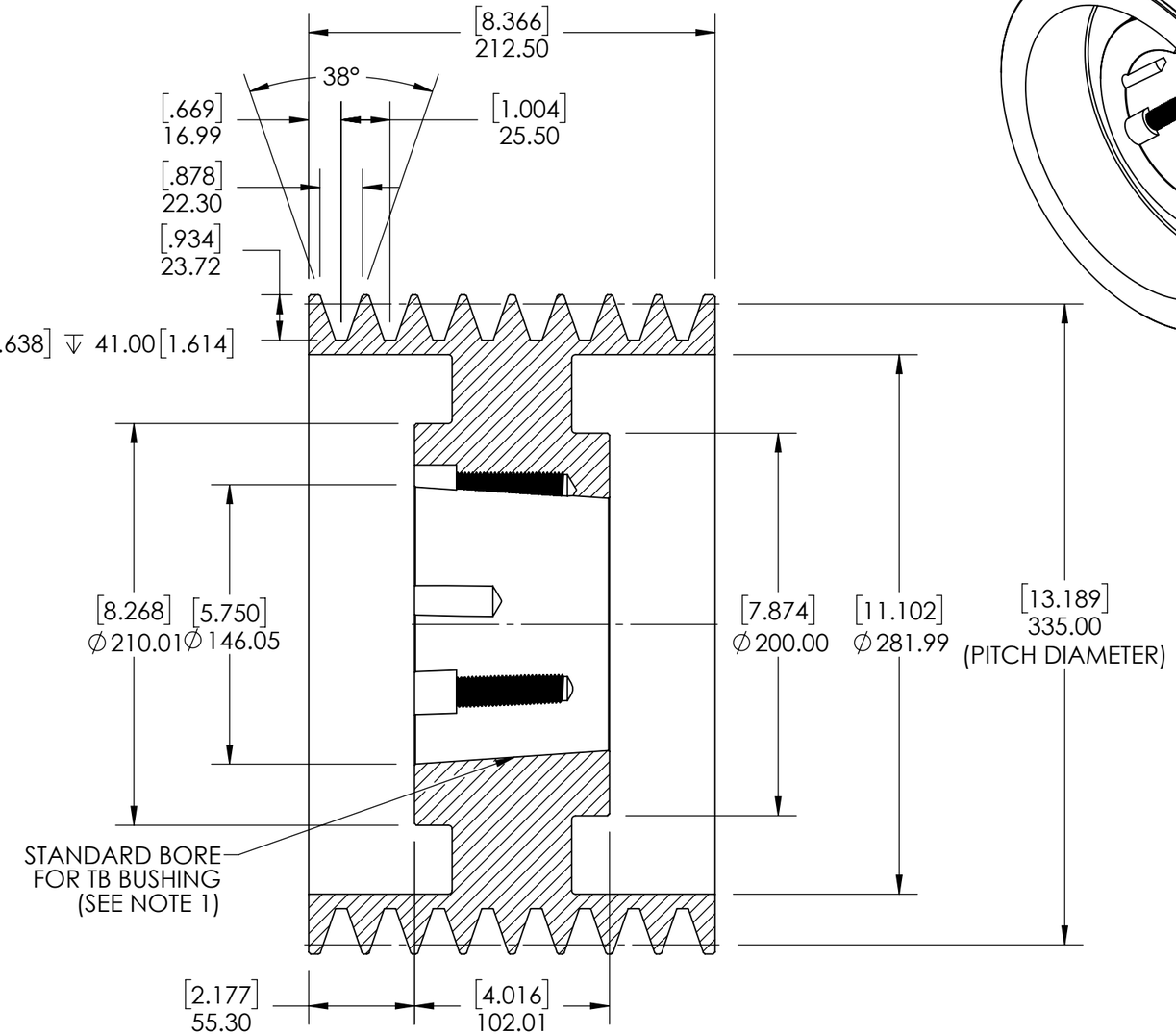

SECTION A-A

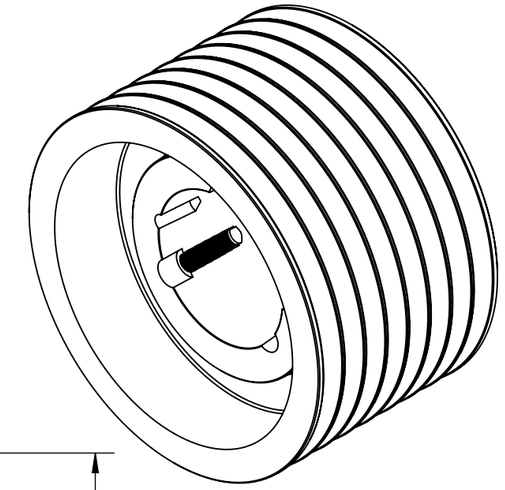

NOTES:
1. TB BUSHING SIZE: 4040
2. UNITS: mm [INCHES].

SOLVE INDUSTRIAL MOTION GROUP	WEIGHT	53.41 KG	
	MATERIAL	CAST IRON	
	COATING	GREY PAINT	
	DRAWN	MTC	09/02/2025
	CHECKED		
SIZE B PTI	APPROVED		
	THIRD ANGLE PROJECTION		
DWG. NO.	PROPRIETARY AND CONFIDENTIAL THE INFORMATION CONTAINED IN THIS DRAWING IS THE SOLE PROPERTY OF Solve IMG. ANY REPRODUCTION IN PART OR AS A WHOLE WITHOUT THE WRITTEN PERMISSION OF Solve IMG IS PROHIBITED.		

DATE	BY	REVISION DESCRIPTION	REV

ITEM DESCRIPTION: SPC335X8-4040

SCALE 1:3

REV -