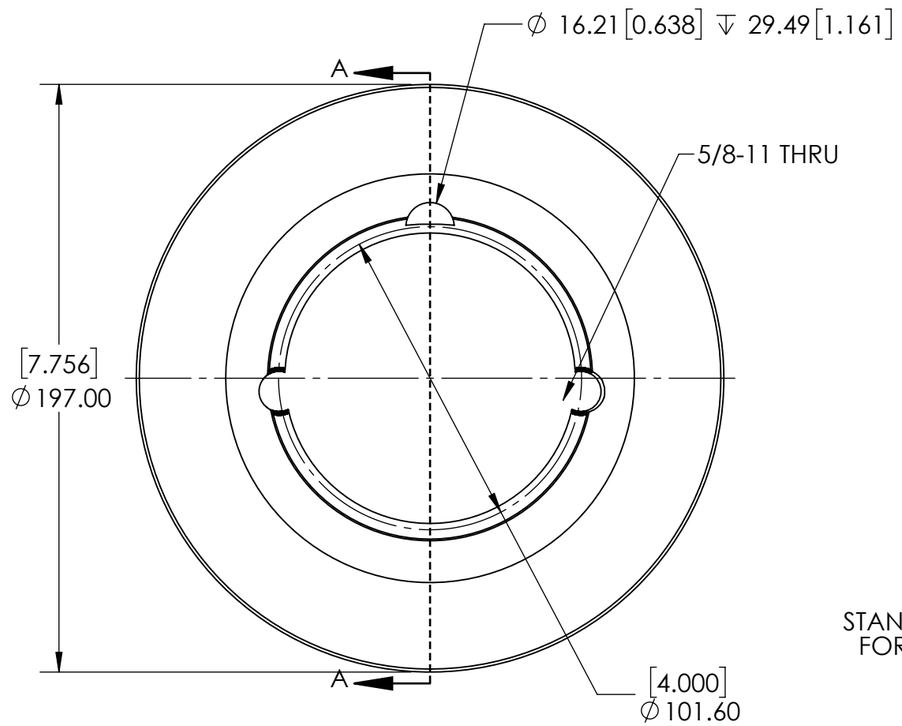

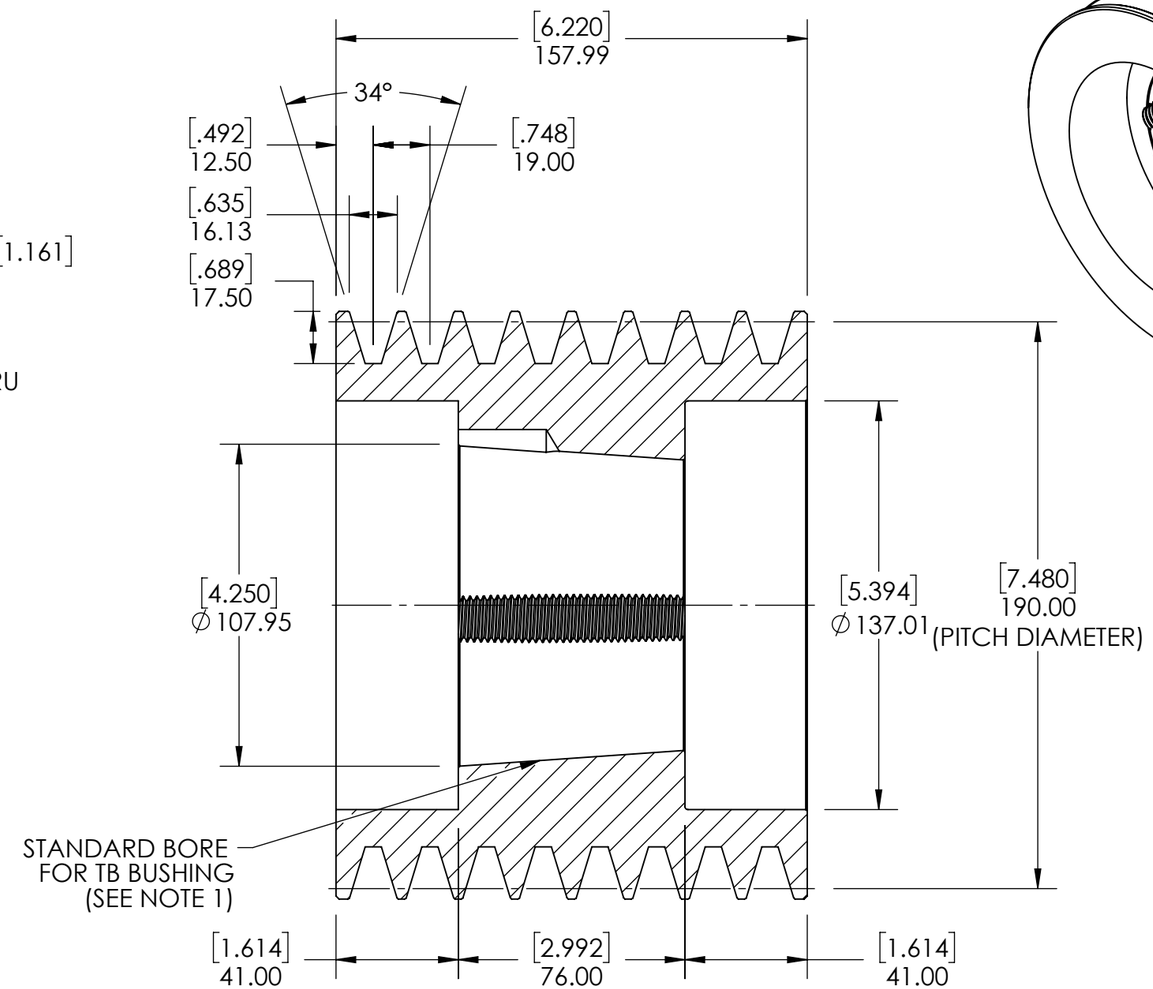

SECTION A-A

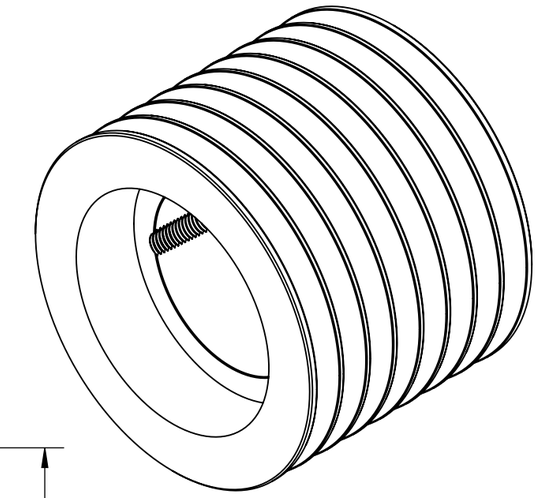

NOTES:
1. TB BUSHING SIZE: 3030
2. UNITS: mm[INCHES].

SOLVE INDUSTRIAL MOTION GROUP	WEIGHT	15.10 KG				
	MATERIAL	CAST IRON				
	COATING	GREY PAINT				
	DRAWN	MTC	09/02/2025			
SIZE B PTI	CHECKED	PT	09/08/2025			
	APPROVED			DATE	BY	REVISION DESCRIPTION	REV
	THIRD ANGLE PROJECTION			ITEM DESCRIPTION:			SCALE 1:2
DWG. NO.	PROPRIETARY AND CONFIDENTIAL THE INFORMATION CONTAINED IN THIS DRAWING IS THE SOLE PROPERTY OF Solve IMG. ANY REPRODUCTION IN PART OR AS A WHOLE WITHOUT THE WRITTEN PERMISSION OF Solve IMG IS PROHIBITED.			SPB190X8-3030			REV -