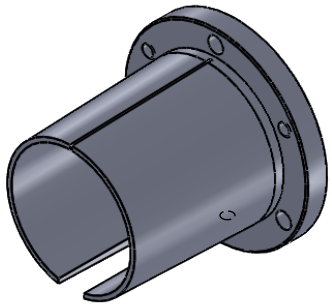

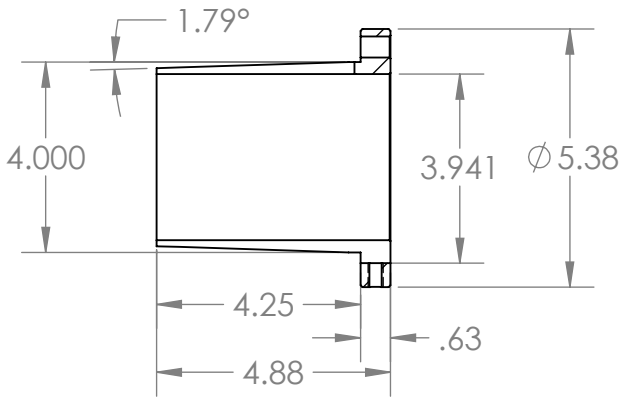

SECTION A-A

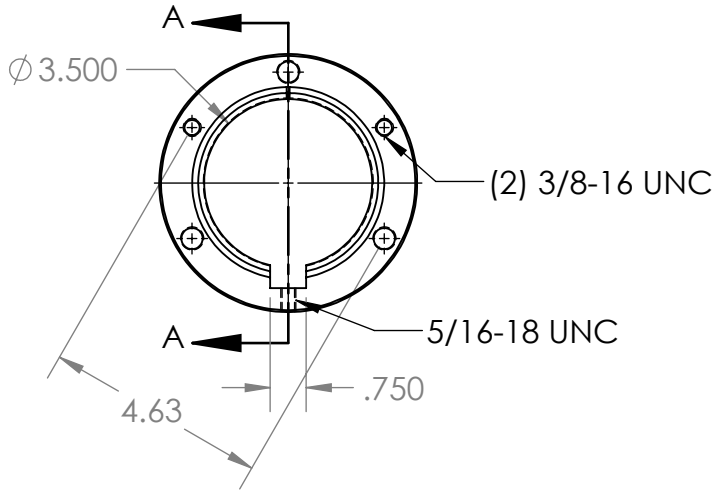

				NAME	DATE
			DRAWN	EDG	01/25/21
			CHECKED		
			ENG APPR.		
			MFG APPR.		
		INTERPRET GEOMETRIC TOLERANCING PER:	Q.A.		
		MATERIAL QT450-10 (Ductile Iron)	COMMENTS:		
NEXT ASSY	USED ON	FINISH Black Phosphate			
APPLICATION		DO NOT SCALE DRAWING			

MASTERDRIVE®
POWER TRANSMISSION PRODUCTS

TITLE:

R2-3.1/2

SIZE	DWG. NO.	REV
A	R2-3.500	
SCALE: 1:4	WEIGHT:	SHEET 1 OF 1

PROPRIETARY AND CONFIDENTIAL

THE INFORMATION CONTAINED IN THIS DRAWING IS THE SOLE PROPERTY OF MASTERDRIVE, INC. ANY REPRODUCTION IN PART OR AS A WHOLE WITHOUT THE WRITTEN PERMISSION OF MASTERDRIVE, INC. IS PROHIBITED.