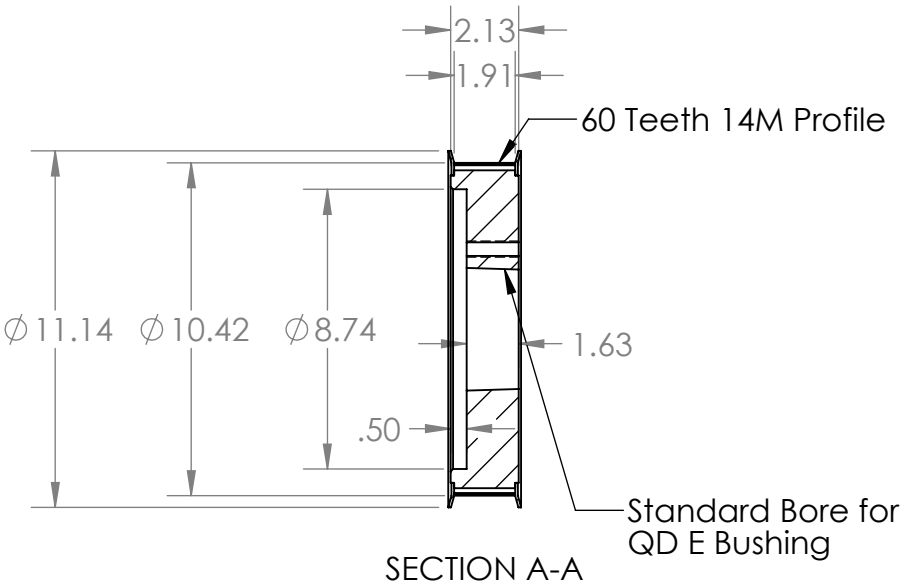

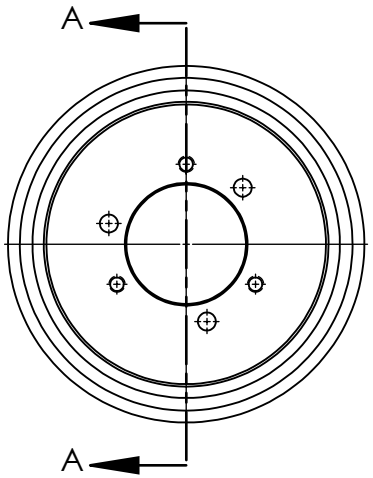

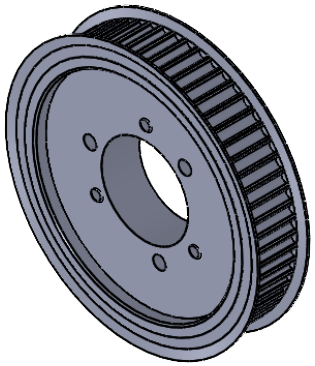

	NAME	DATE
DRAWN	EDG	12/27/21
CHECKED		
ENG APPR.		
MFG APPR.		
Q.A.		

COMMENTS:

INTERPRET GEOMETRIC TOLERANCING PER:

MATERIAL
HT200 (Cast Iron)

FINISH
Grey Paint

DO NOT SCALE DRAWING

NEXT ASSY	USED ON
APPLICATION	

MASTERDRIVE®
POWER TRANSMISSION PRODUCTS

TITLE:
P60-14M-40-E

SIZE	DWG. NO.	REV
A	P60-14M-40-E	

SCALE: 1:6 | WEIGHT: | SHEET 1 OF 1

PROPRIETARY AND CONFIDENTIAL

THE INFORMATION CONTAINED IN THIS DRAWING IS THE SOLE PROPERTY OF MASTERDRIVE, INC. ANY REPRODUCTION IN PART OR AS A WHOLE WITHOUT THE WRITTEN PERMISSION OF MASTERDRIVE, INC. IS PROHIBITED.