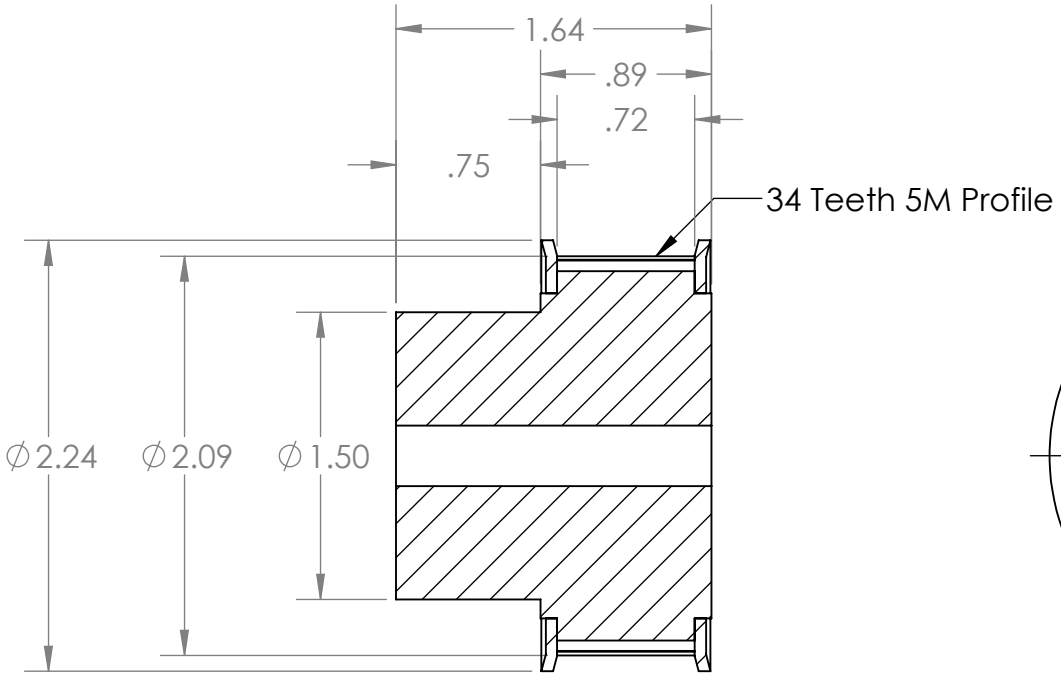


SECTION A-A

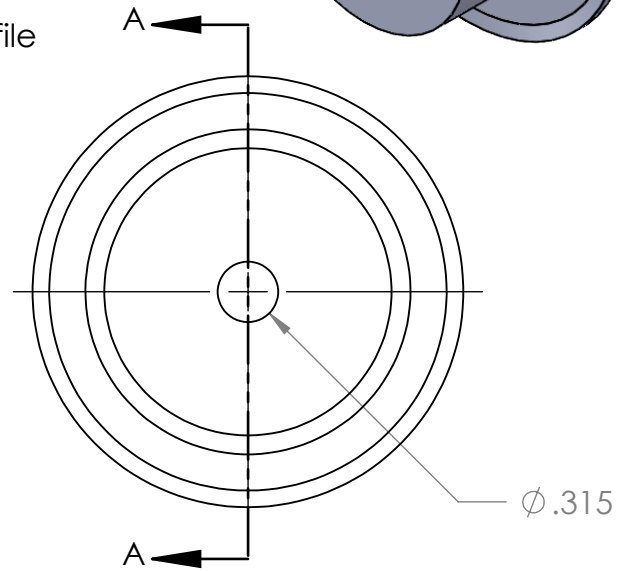


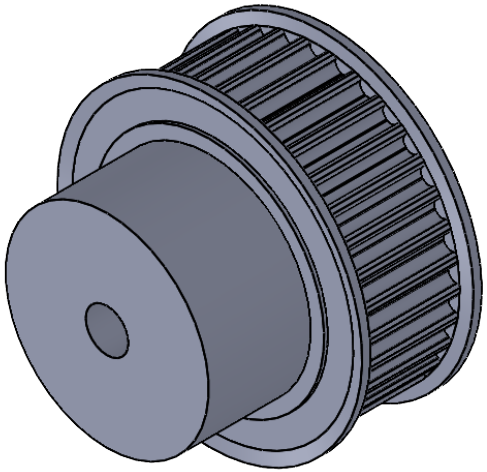

| | NAME | DATE |
|---|---|---|
| DRAWN | EDG | 11/09/21 |
| CHECKED | | |
| ENG APPR. | | |
| MFG APPR. | | |
| Q.A. | | |

COMMENTS:

INTERPRET GEOMETRIC TOLERANCING PER:

MATERIAL
HT200 (Cast Iron)

FINISH
Grey Paint

DO NOT SCALE DRAWING

| NEXT ASSY | USED ON |
|---|---|
| APPLICATION | |

**PROPRIETARY AND CONFIDENTIAL**

THE INFORMATION CONTAINED IN THIS DRAWING IS THE SOLE PROPERTY OF MASTERDRIVE, INC. ANY REPRODUCTION IN PART OR AS A WHOLE WITHOUT THE WRITTEN PERMISSION OF MASTERDRIVE, INC. IS PROHIBITED.

MASTERDRIVE®
POWER TRANSMISSION PRODUCTS

TITLE:
# P34-5M-15-PB

| SIZE | DWG. NO. | REV |
|---|---|---|
| A | P34-5M-15-PB | |

SCALE: 1:1 | WEIGHT: | SHEET 1 OF 1