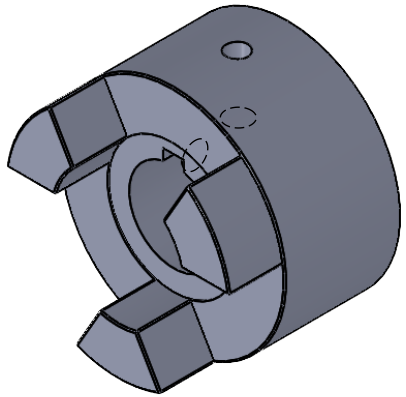

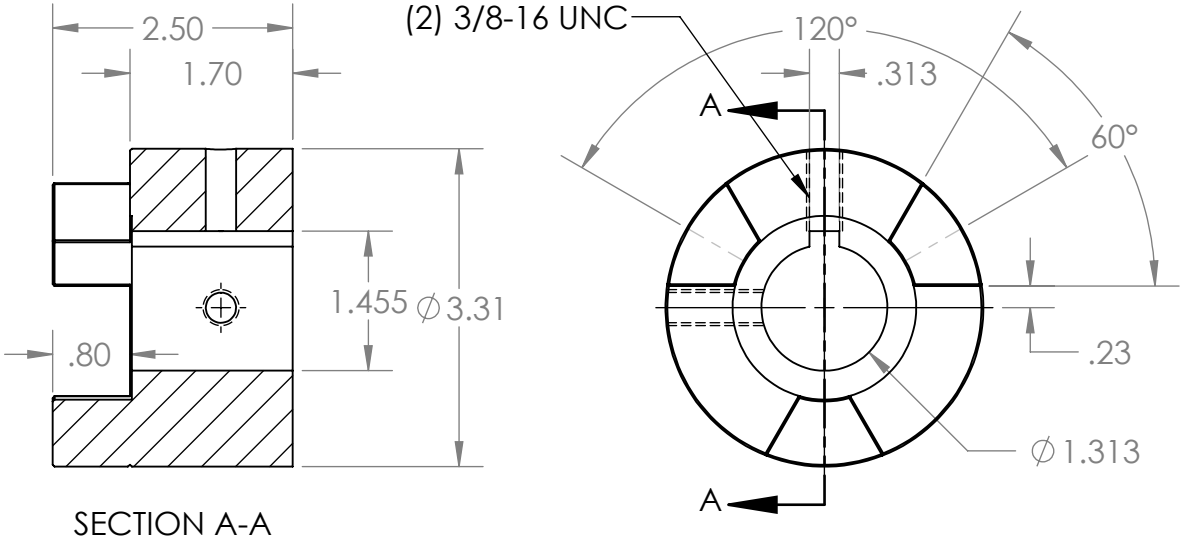

				NAME	DATE
			DRAWN	EDG	02/04/22
			CHECKED		
			ENG APPR.		
			MFG APPR.		
		INTERPRET GEOMETRIC TOLERANCING PER:	Q.A.		
		MATERIAL HT200 (Cast Iron)	COMMENTS:		
NEXT ASSY	USED ON	FINISH Black Phosphate			
APPLICATION		DO NOT SCALE DRAWING			

PROPRIETARY AND CONFIDENTIAL

THE INFORMATION CONTAINED IN THIS DRAWING IS THE SOLE PROPERTY OF MASTERDRIVE INC. ANY REPRODUCTION IN PART OR AS A WHOLE WITHOUT THE WRITTEN PERMISSION OF MASTERDRIVE INC ISPROHIBITED.

MASTERDRIVE®
POWER TRANSMISSION PRODUCTS

TITLE:

L110-1-5/16

SIZE	DWG. NO.	REV
A	L110-1.313	
SCALE: 1:2	WEIGHT:	SHEET 1 OF 1