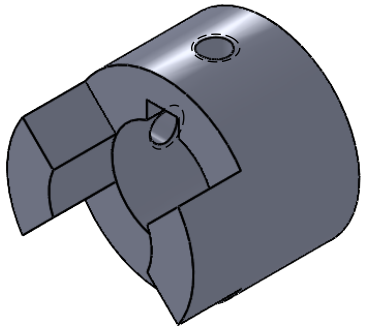

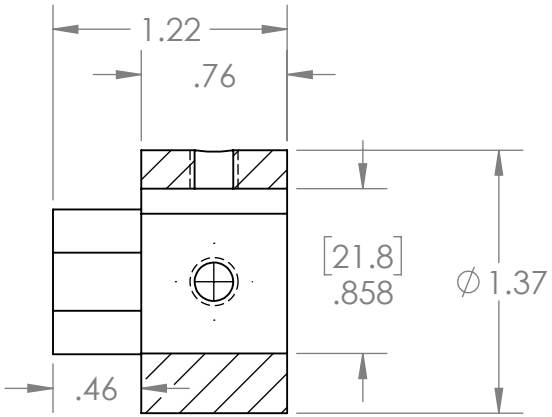

SECTION A-A

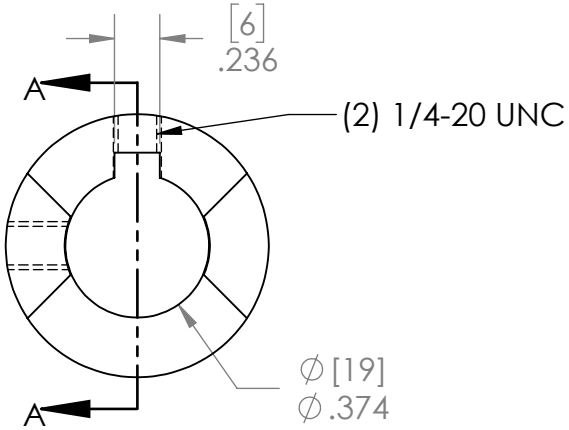

				NAME	DATE
			DRAWN	EDG	01/13/22
			CHECKED		
			ENG APPR.		
			MFG APPR.		
		INTERPRET GEOMETRIC TOLERANCING PER:	Q.A.		
		MATERIAL Powdered Metal	COMMENTS:		
NEXT ASSY	USED ON	FINISH None			
APPLICATION		DO NOT SCALE DRAWING			

PROPRIETARY AND CONFIDENTIAL

THE INFORMATION CONTAINED IN THIS DRAWING IS THE SOLE PROPERTY OF MASTERDRIVE, INC. ANY REPRODUCTION IN PART OR AS A WHOLE WITHOUT THE WRITTEN PERMISSION OF MASTERDRIVE, INC. IS PROHIBITED.

MASTERDRIVE®
POWER TRANSMISSION PRODUCTS

TITLE:

L070-19MM

SIZE	DWG. NO.	REV
A	L070-19MM	
SCALE: 1:1	WEIGHT:	SHEET 1 OF 1