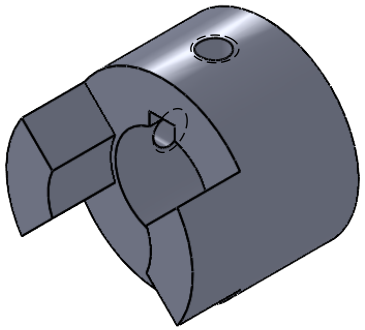

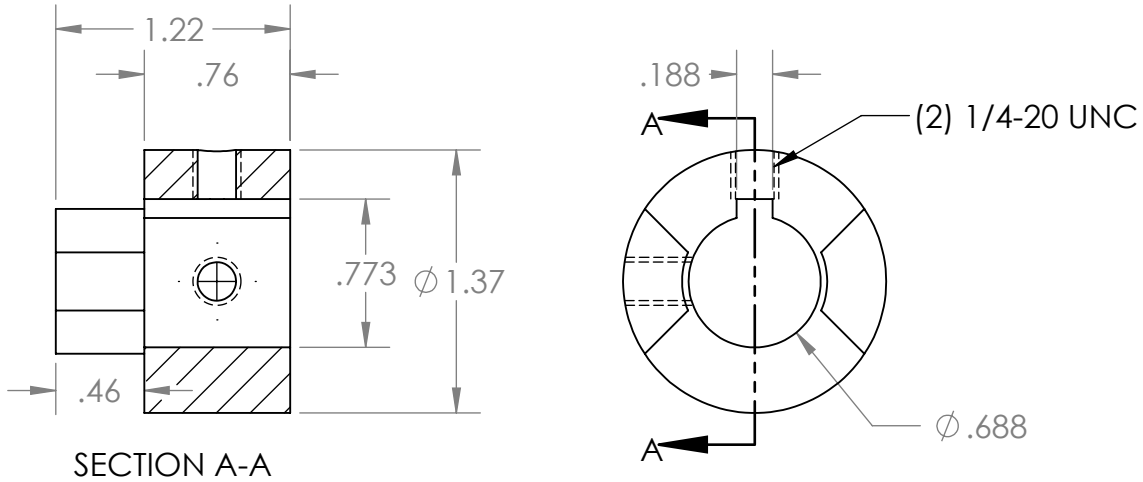

				NAME	DATE
			DRAWN	EDG	01/13/22
			CHECKED		
			ENG APPR.		
			MFG APPR.		
		INTERPRET GEOMETRIC TOLERANCING PER:	Q.A.		
		MATERIAL Powdered Metal	COMMENTS:		
NEXT ASSY	USED ON	FINISH None			
APPLICATION		DO NOT SCALE DRAWING			

MASTERDRIVE®
POWER TRANSMISSION PRODUCTS

TITLE:
L070-11/16

SIZE	DWG. NO.	REV
A	L070-0.688	

SCALE: 1:1 | WEIGHT: | SHEET 1 OF 1

PROPRIETARY AND CONFIDENTIAL

THE INFORMATION CONTAINED IN THIS DRAWING IS THE SOLE PROPERTY OF MASTERDRIVE, INC. ANY REPRODUCTION IN PART OR AS A WHOLE WITHOUT THE WRITTEN PERMISSION OF MASTERDRIVE, INC. IS PROHIBITED.