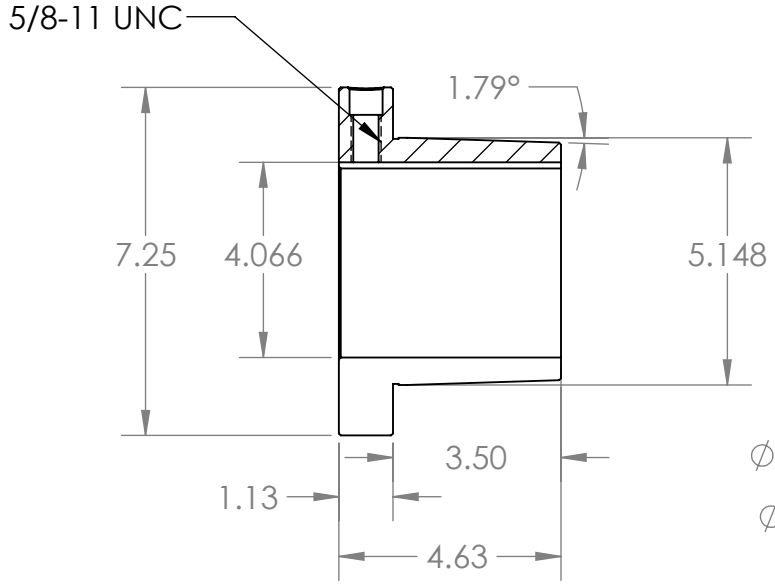

SECTION A-A

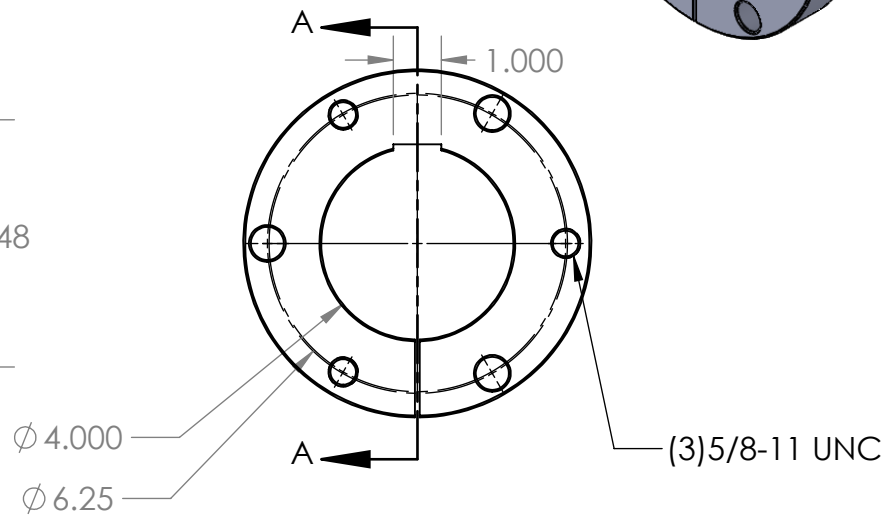

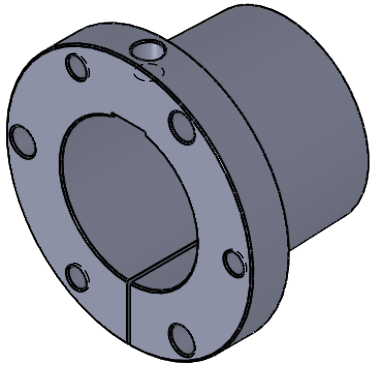

PROPRIETARY AND CONFIDENTIAL

THE INFORMATION CONTAINED IN THIS DRAWING IS THE SOLE PROPERTY OF <INSERT COMPANY NAME HERE>. ANY REPRODUCTION IN PART OR AS A WHOLE WITHOUT THE WRITTEN PERMISSION OF <INSERT COMPANY NAME HERE> IS PROHIBITED.

NEXT ASSY	USED ON
APPLICATION	

INTERPRET GEOMETRIC TOLERANCING PER:

MATERIAL
QT450-10 (Ductile Iron)

FINISH
Black Phosphate

DO NOT SCALE DRAWING

	NAME	DATE
DRAWN	EDG	10/23/19
CHECKED		
ENG APPR.		
MFG APPR.		
Q.A.		

COMMENTS:

MASTERDRIVE®
POWER TRANSMISSION PRODUCTS

TITLE:
J4

SIZE	DWG. NO.	REV
A	J4.000	

SCALE: 1:4 | WEIGHT: | SHEET 1 OF 1