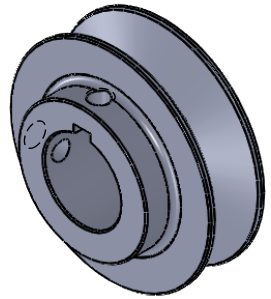

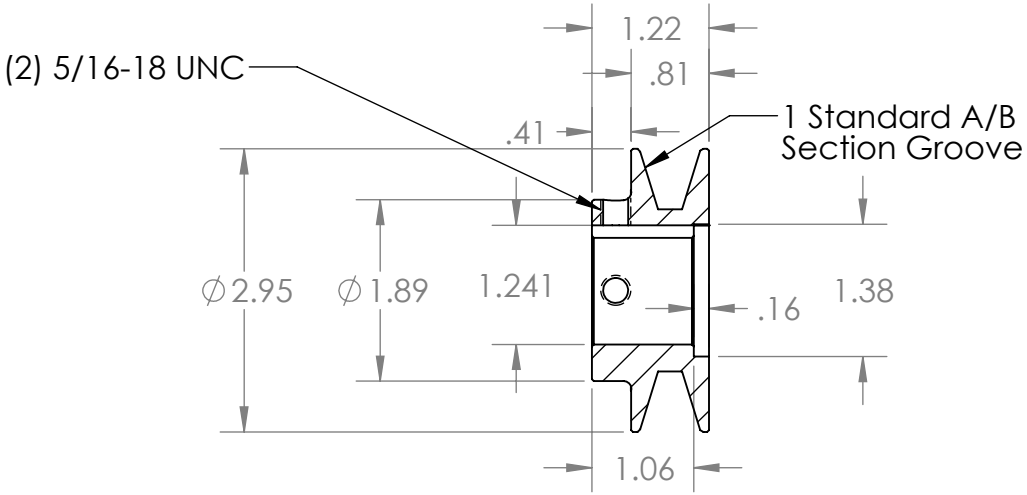

SECTION A-A

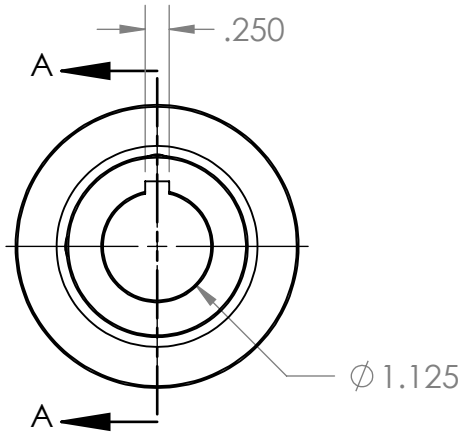

				NAME	DATE
			DRAWN	EDG	04/19/21
			CHECKED		
			ENG APPR.		
			MFG APPR.		
		INTERPRET GEOMETRIC TOLERANCING PER:	Q.A.		
		MATERIAL HT200 (Cast Iron)	COMMENTS:		
NEXT ASSY	USED ON	FINISH Grey Paint			
APPLICATION		DO NOT SCALE DRAWING			

MASTERDRIVE®
POWER TRANSMISSION PRODUCTS

TITLE:

BK28-1-1/8

SIZE	DWG. NO.	REV
A	BK28-1.125	

SCALE: 1:2 | WEIGHT: | SHEET 1 OF 1

PROPRIETARY AND CONFIDENTIAL

THE INFORMATION CONTAINED IN THIS DRAWING IS THE SOLE PROPERTY OF MASTERDRIVE, INC. ANY REPRODUCTION IN PART OR AS A WHOLE WITHOUT THE WRITTEN PERMISSION OF MASTERDRIVE, INC. IS PROHIBITED.