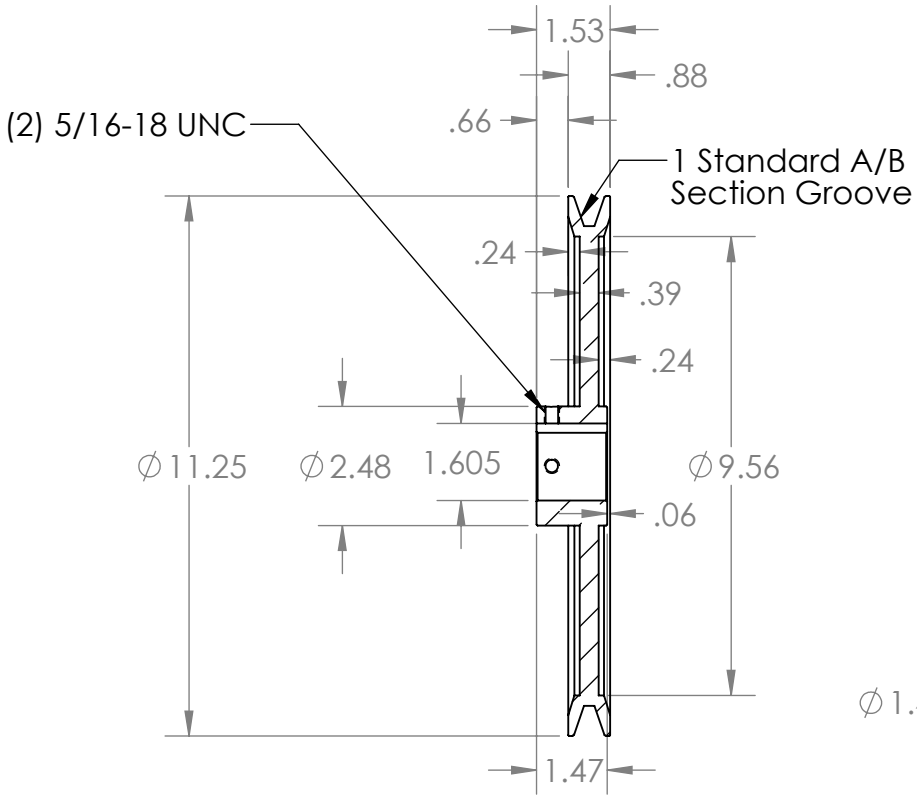

SECTION A-A

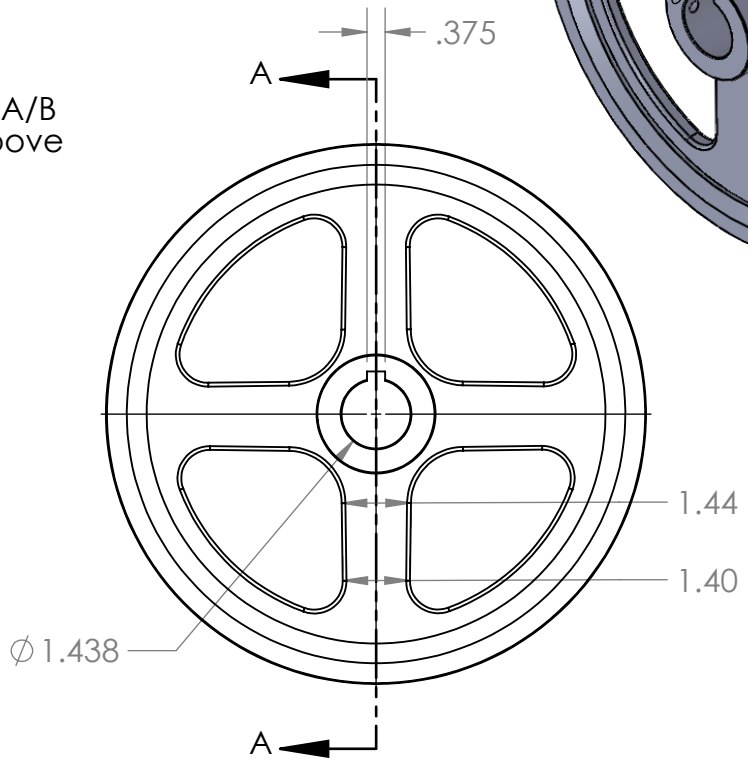

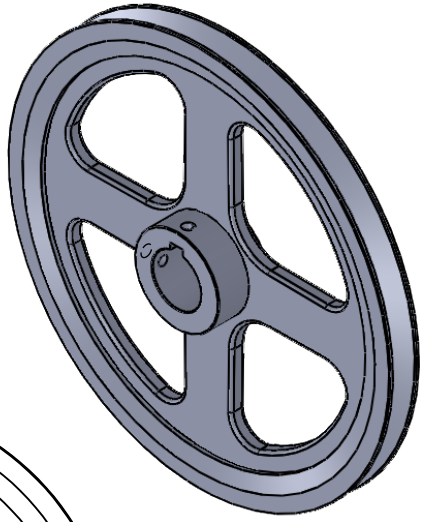

			NAME	DATE
		DRAWN	EDG	05/28/21
		CHECKED		
		ENG APPR.		
		MFG APPR.		
		Q.A.		
		COMMENTS:		
NEXT ASSY	USED ON	INTERPRET GEOMETRIC TOLERANCING PER:		
		MATERIAL HT200 (Cast Iron)		
		FINISH Grey Paint		
APPLICATION		DO NOT SCALE DRAWING		

MASTERDRIVE®
POWER TRANSMISSION PRODUCTS

TITLE:
BK115-1-7/16

SIZE	DWG. NO.	REV
A	BK115-1.438	

SCALE: 1:4 | WEIGHT: | SHEET 1 OF 1

PROPRIETARY AND CONFIDENTIAL

THE INFORMATION CONTAINED IN THIS DRAWING IS THE SOLE PROPERTY OF MASTERDRIVE, INC. ANY REPRODUCTION IN PART OR AS A WHOLE WITHOUT THE WRITTEN PERMISSION OF MASTERDRIVE, INC. IS PROHIBITED.