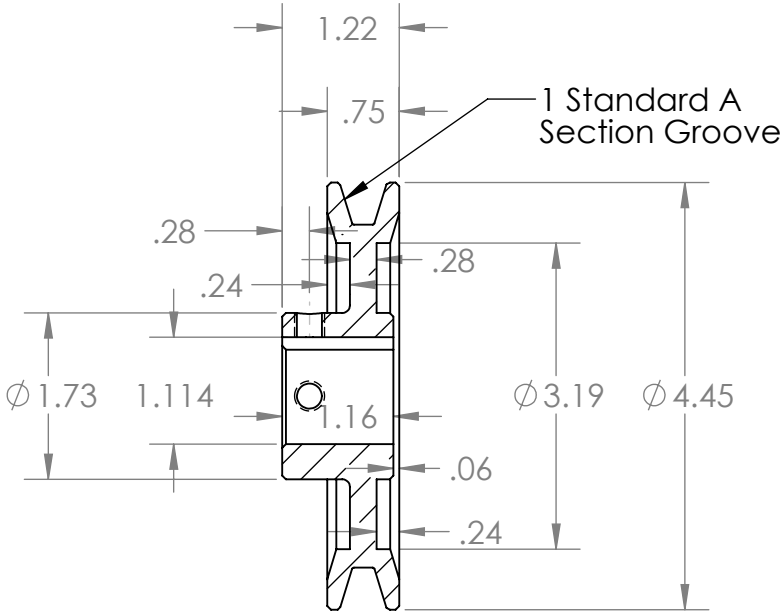

SECTION A-A

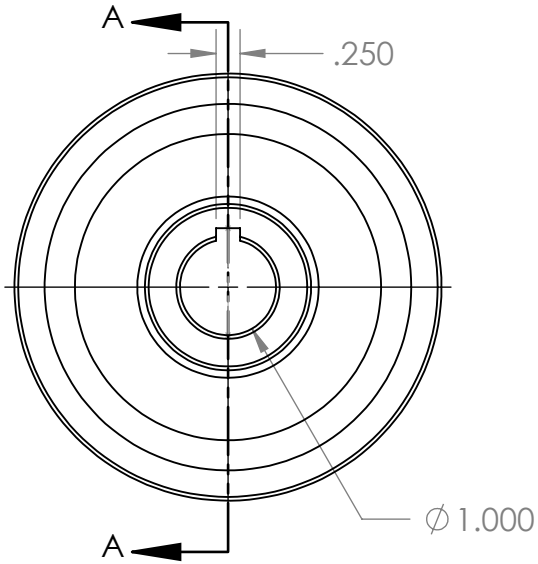

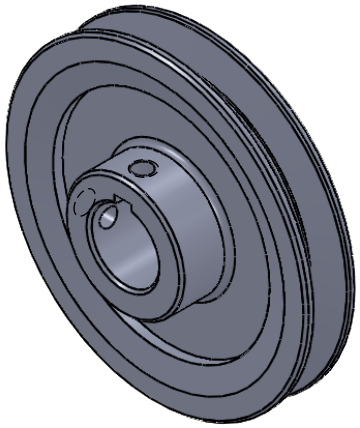

Note: 10/19/18 Hub diameter changed from 1.73" to 1.89"

				NAME	DATE
			DRAWN	EDG	10/19/18
			CHECKED		
			ENG APPR.		
			MFG APPR.		
		INTERPRET GEOMETRIC TOLERANCING PER:	Q.A.		
		MATERIAL HT200 (Cast Iron)	COMMENTS:		
NEXT ASSY	USED ON	FINISH Grey Paint			
APPLICATION		DO NOT SCALE DRAWING			

MASTERDRIVE®
POWER TRANSMISSION PRODUCTS

TITLE:

AK46-1

SIZE	DWG. NO.	REV
A	AK46-1.000	
SCALE: 1:2	WEIGHT:	SHEET 1 OF 1

PROPRIETARY AND CONFIDENTIAL

THE INFORMATION CONTAINED IN THIS DRAWING IS THE SOLE PROPERTY OF <INSERT COMPANY NAME HERE>. ANY REPRODUCTION IN PART OR AS A WHOLE WITHOUT THE WRITTEN PERMISSION OF <INSERT COMPANY NAME HERE> IS PROHIBITED.