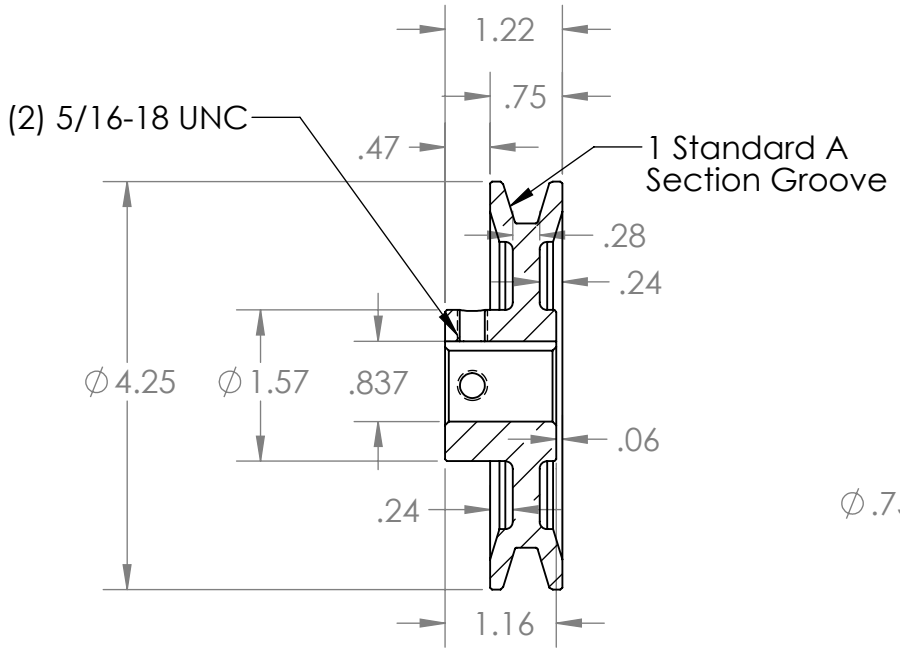

SECTION A-A

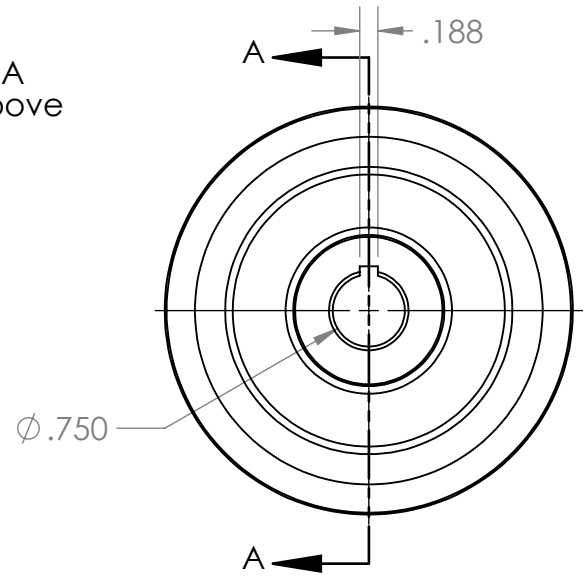

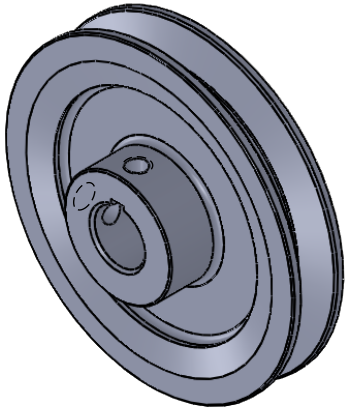

PROPRIETARY AND CONFIDENTIAL

THE INFORMATION CONTAINED IN THIS DRAWING IS THE SOLE PROPERTY OF MASTERDRIVE, INC. ANY REPRODUCTION IN PART OR AS A WHOLE WITHOUT THE WRITTEN PERMISSION OF MASTERDRIVE, INC. IS PROHIBITED.

NEXT ASSY	USED ON
APPLICATION	

INTERPRET GEOMETRIC TOLERANCING PER:

MATERIAL: HT200 (Cast Iron)

FINISH: Grey Paint

DO NOT SCALE DRAWING

	NAME	DATE
DRAWN	EDG	02/15/21
CHECKED		
ENG APPR.		
MFG APPR.		
Q.A.		

COMMENTS:

MASTERDRIVE® POWER TRANSMISSION PRODUCTS

TITLE: AK44-3/4

SIZE	DWG. NO.	REV
A	AK44-0.750	

SCALE: 1:2 | WEIGHT: | SHEET 1 OF 1