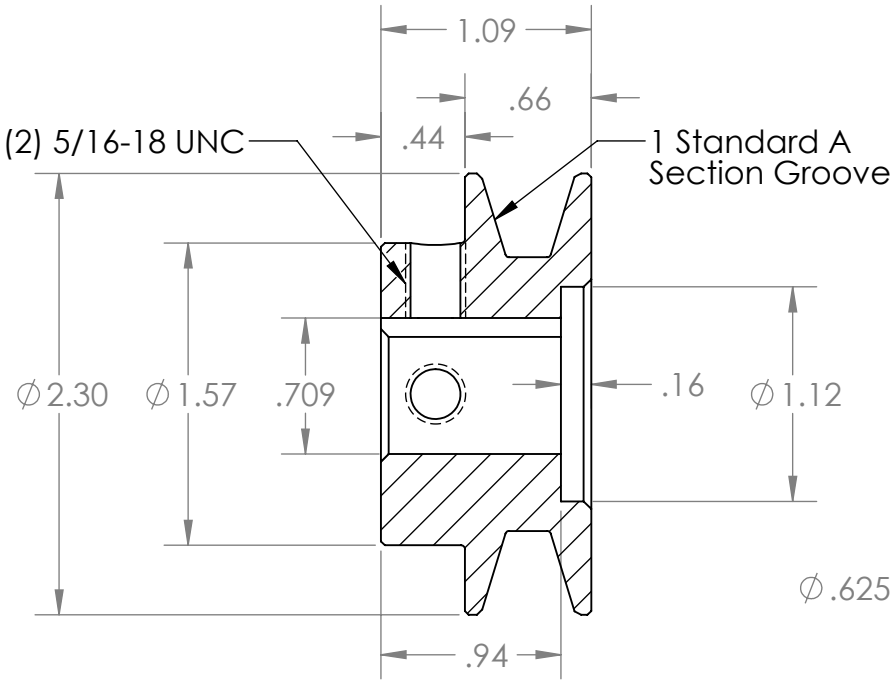

SECTION A-A

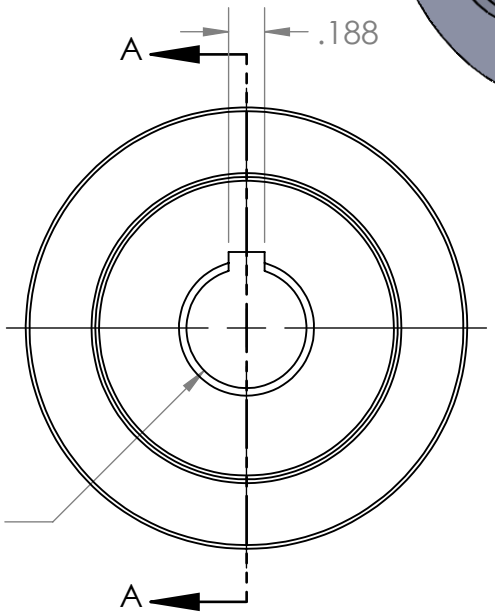

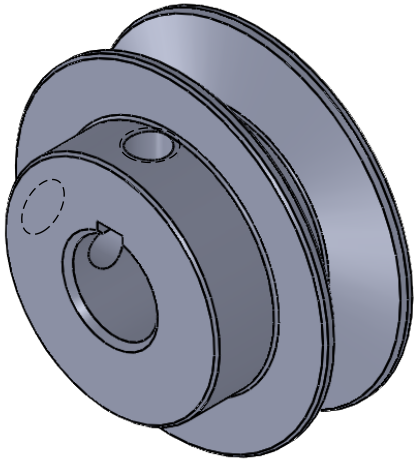

	NAME	DATE
DRAWN	EDG	02/11/21
CHECKED		
ENG APPR.		
MFG APPR.		
Q.A.		

COMMENTS:

INTERPRET GEOMETRIC TOLERANCING PER:

MATERIAL: HT200 (Cast Iron)

FINISH: Grey Paint

DO NOT SCALE DRAWING

NEXT ASSY	USED ON
APPLICATION	

MASTERDRIVE® POWER TRANSMISSION PRODUCTS

TITLE: AK23-5/8

SIZE	DWG. NO.	REV
A	AK23-0.625	

SCALE: 1:1 | WEIGHT: | SHEET 1 OF 1

PROPRIETARY AND CONFIDENTIAL

THE INFORMATION CONTAINED IN THIS DRAWING IS THE SOLE PROPERTY OF MASTERDRIVE, INC. ANY REPRODUCTION IN PART OR AS A WHOLE WITHOUT THE WRITTEN PERMISSION OF MASTERDRIVE, INC. IS PROHIBITED.