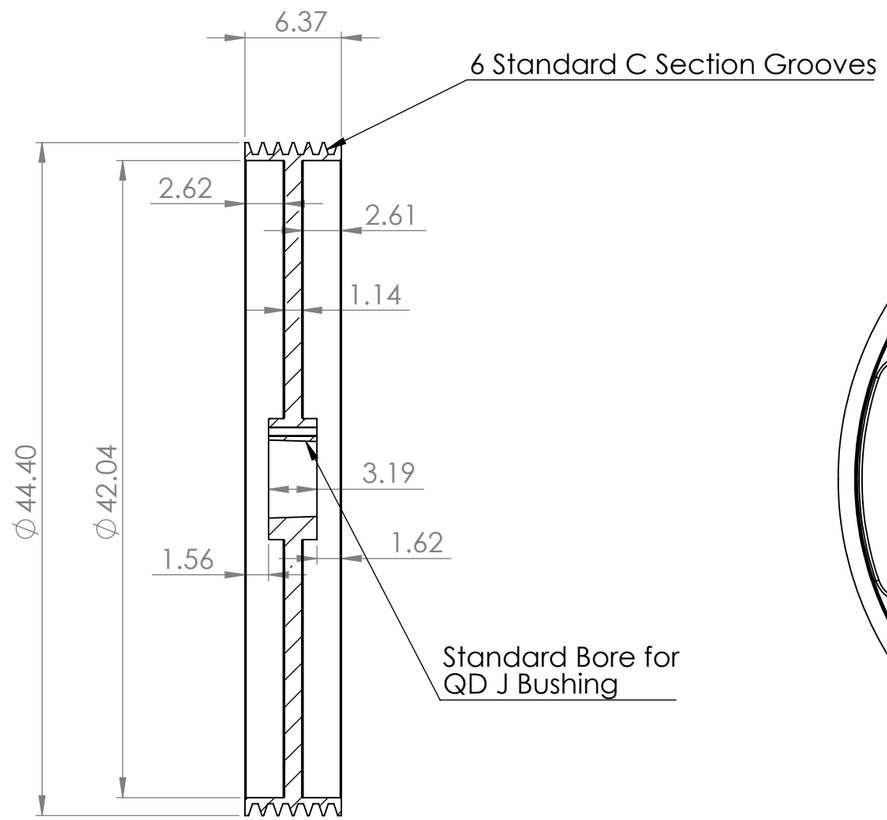

SECTION A-A

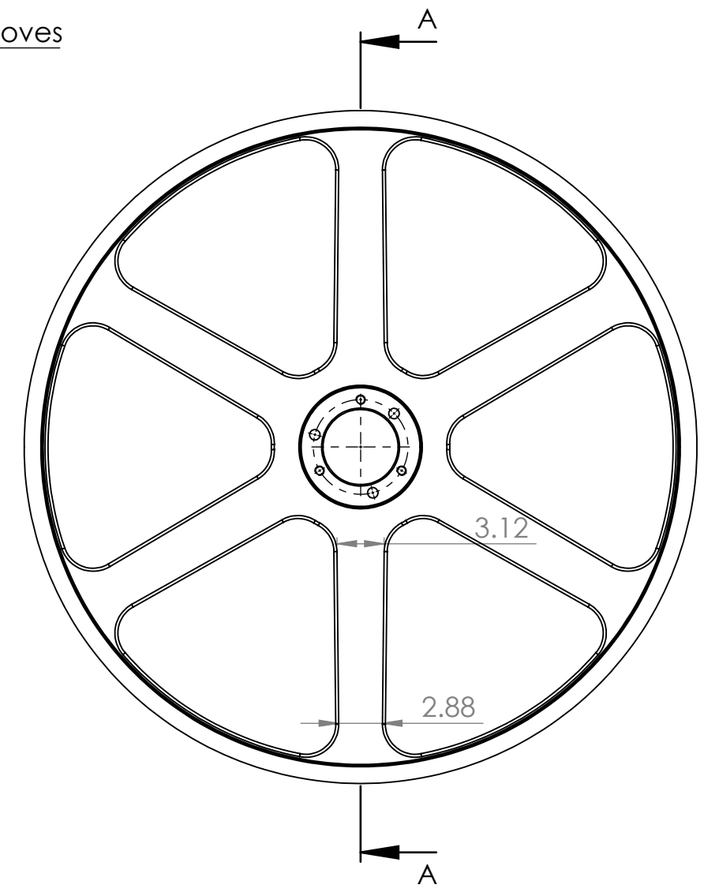

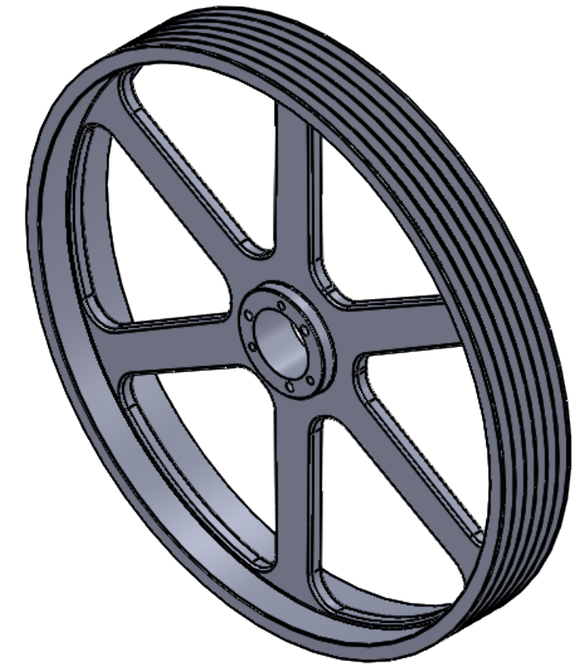

PROPRIETARY AND CONFIDENTIAL

THE INFORMATION CONTAINED IN THIS DRAWING IS THE SOLE PROPERTY OF MASTERDRIVE, INC. ANY REPRODUCTION IN PART OR AS A WHOLE WITHOUT THE WRITTEN PERMISSION OF MASTERDRIVE, INC. IS PROHIBITED.

NEXT ASSY	USED ON
APPLICATION	

INTERPRET GEOMETRIC TOLERANCING PER:

MATERIAL: HT200 (Cast Iron)

FINISH: Grey Paint

DO NOT SCALE DRAWING

	NAME	DATE
DRAWN	EDG	06/14/19
CHECKED		
ENG APPR.		
MFG APPR.		
Q.A.		

COMMENTS:

MASTERDRIVE®
POWER TRANSMISSION PRODUCTS

TITLE: 6C440J

SIZE	DWG. NO.	REV
B	6C440J	

SCALE: 1:10 WEIGHT: SHEET 1 OF 1