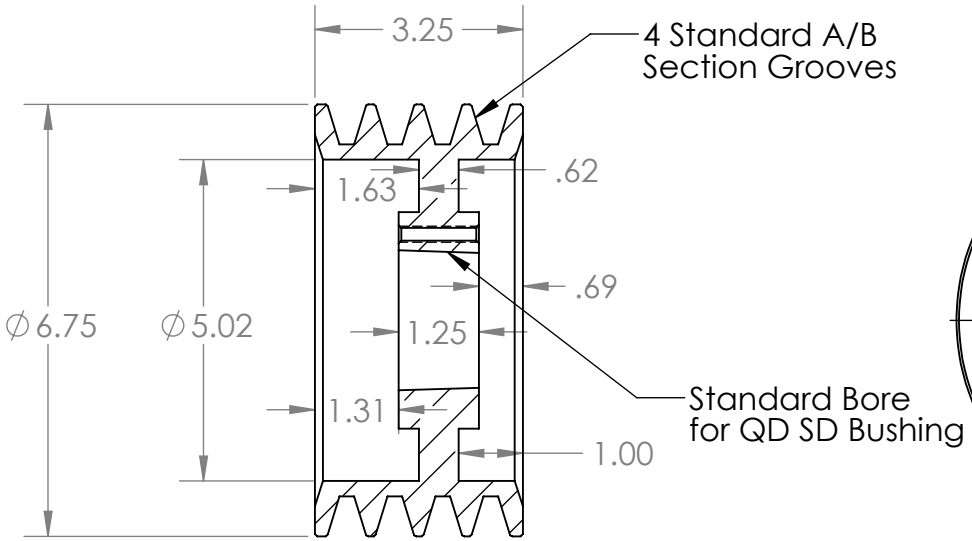

SECTION A-A

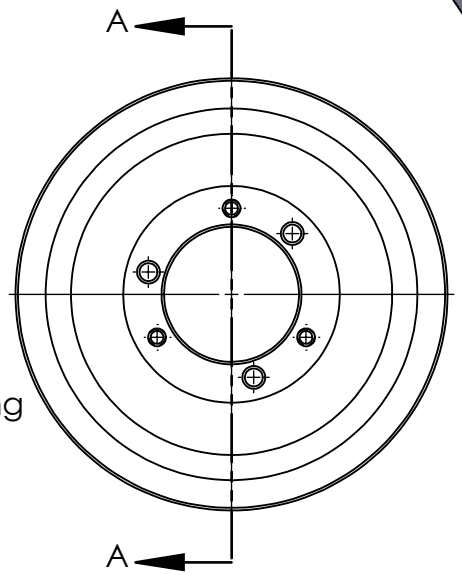

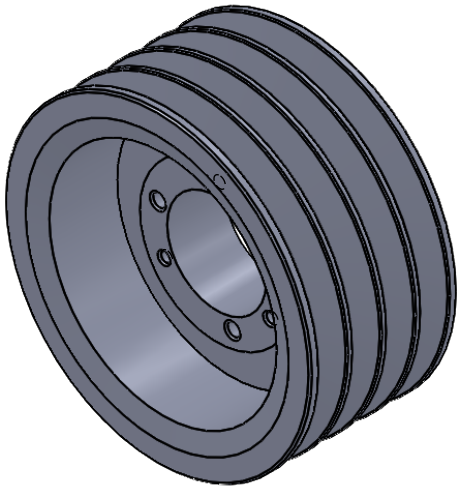

			NAME	DATE
		DRAWN	EDG	09/12/18
		CHECKED		
		ENG APPR.		
		MFG APPR.		
		Q.A.		
		COMMENTS:		
NEXT ASSY	USED ON	INTERPRET GEOMETRIC TOLERANCING PER:		
APPLICATION		MATERIAL HT200 (Cast Iron)		
		FINISH Grey Paint		
		DO NOT SCALE DRAWING		

MASTERDRIVE®
POWER TRANSMISSION PRODUCTS

TITLE: 4B64SD

SIZE	DWG. NO.	REV
A	4B64SD	

SCALE: 1:3 | WEIGHT: | SHEET 1 OF 1

PROPRIETARY AND CONFIDENTIAL

THE INFORMATION CONTAINED IN THIS DRAWING IS THE SOLE PROPERTY OF <INSERT COMPANY NAME HERE>. ANY REPRODUCTION IN PART OR AS A WHOLE WITHOUT THE WRITTEN PERMISSION OF <INSERT COMPANY NAME HERE> IS PROHIBITED.