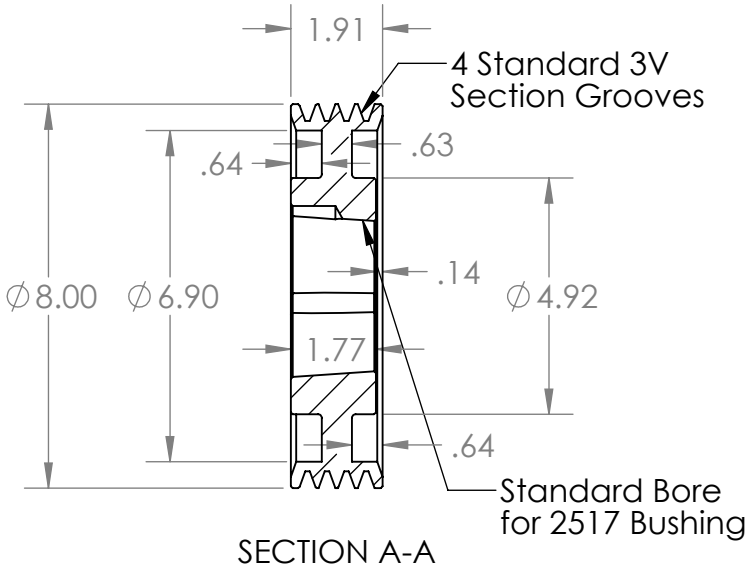

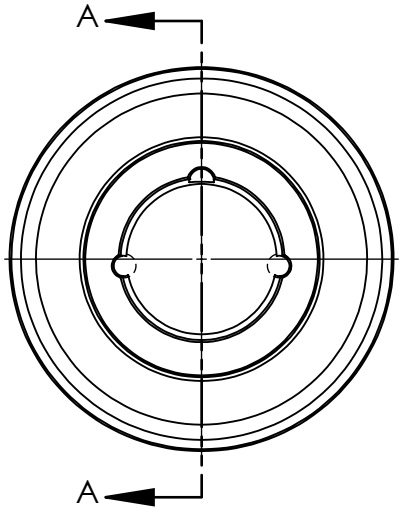

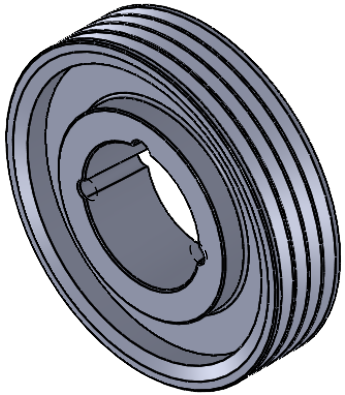

			NAME	DATE
		DRAWN	EDG	09/21/21
		CHECKED		
		ENG APPR.		
		MFG APPR.		
		Q.A.		
		COMMENTS:		
NEXT ASSY	USED ON	INTERPRET GEOMETRIC TOLERANCING PER:		
APPLICATION		MATERIAL HT200 (Cast Iron)		
		FINISH Grey Paint		
		DO NOT SCALE DRAWING		

MASTERDRIVE®
POWER TRANSMISSION PRODUCTS

TITLE:
4/3V800-2517

SIZE	DWG. NO.	REV
A	43V800-2517	
SCALE: 1:4	WEIGHT:	SHEET 1 OF 1

PROPRIETARY AND CONFIDENTIAL

THE INFORMATION CONTAINED IN THIS DRAWING IS THE SOLE PROPERTY OF MASTERDRIVE, INC. ANY REPRODUCTION IN PART OR AS A WHOLE WITHOUT THE WRITTEN PERMISSION OF MASTERDRIVE, INC. IS PROHIBITED.