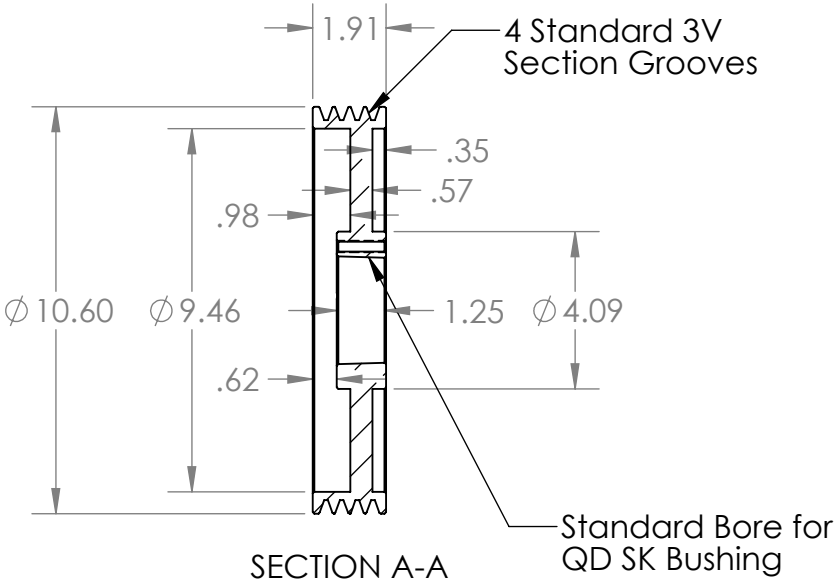

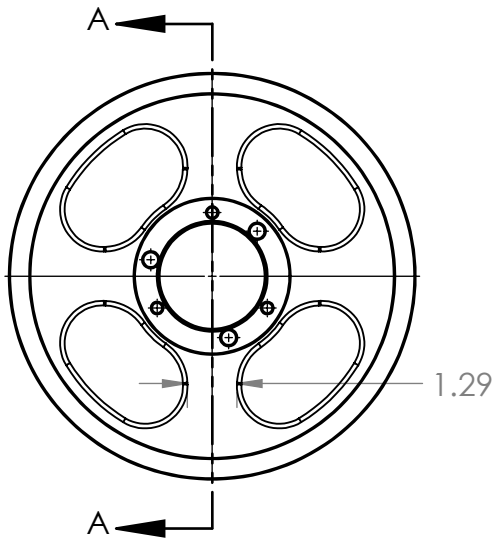

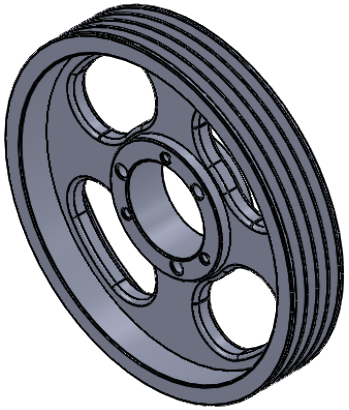

			NAME	DATE
		DRAWN	EDG	06/12/20
		CHECKED		
		ENG APPR.		
		MFG APPR.		
		Q.A.		
		COMMENTS:		
NEXT ASSY	USED ON	INTERPRET GEOMETRIC TOLERANCING PER:		
		MATERIAL HT200 (Cast Iron)		
		FINISH Grey Paint		
APPLICATION		DO NOT SCALE DRAWING		

MASTERDRIVE®
POWER TRANSMISSION PRODUCTS

TITLE:
4/3V1060SK

SIZE	DWG. NO.	REV
A	43V1060SK	
SCALE: 1:5	WEIGHT:	SHEET 1 OF 1

PROPRIETARY AND CONFIDENTIAL

THE INFORMATION CONTAINED IN THIS DRAWING IS THE SOLE PROPERTY OF <INSERT COMPANY NAME HERE>. ANY REPRODUCTION IN PART OR AS A WHOLE WITHOUT THE WRITTEN PERMISSION OF <INSERT COMPANY NAME HERE> IS PROHIBITED.