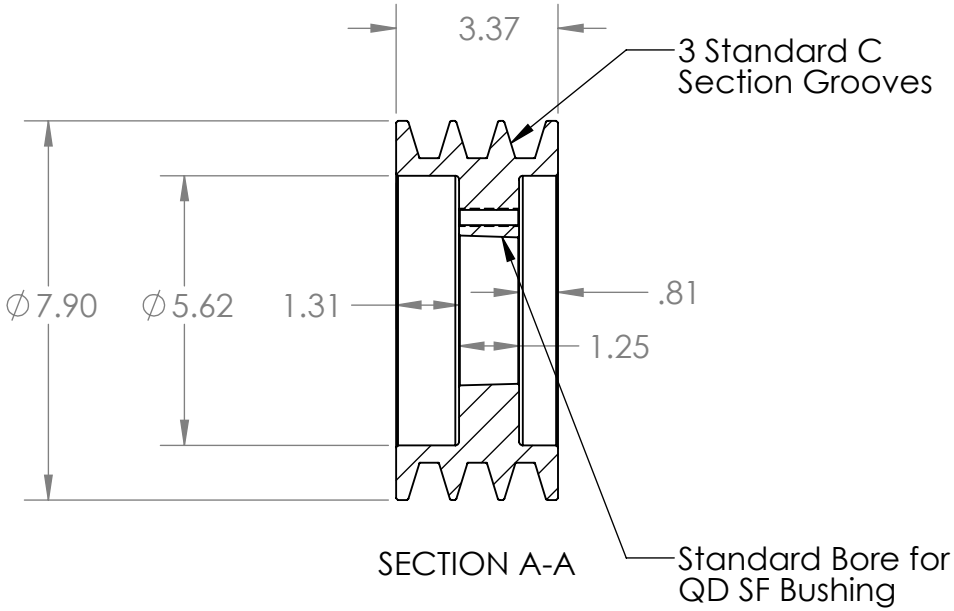


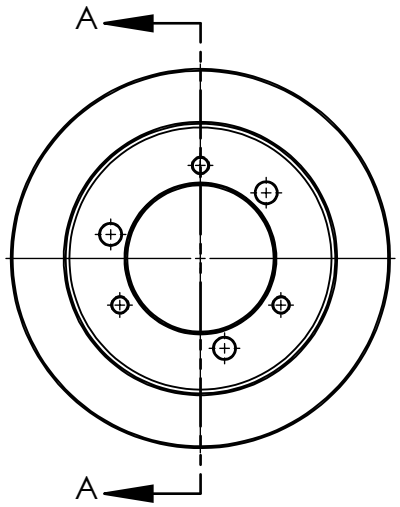


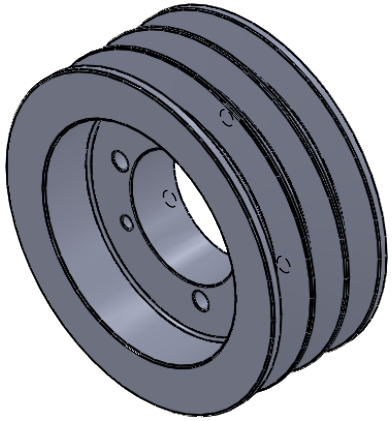

| | | | NAME | DATE |
|---|---|---|---|---|
| | | DRAWN | EDG | 04/30/20 |
| | | CHECKED | | |
| | | ENG APPR. | | |
| | | MFG APPR. | | |
| | | Q.A. | | |
| | | COMMENTS: | | |
| NEXT ASSY | USED ON | INTERPRET GEOMETRIC TOLERANCING PER: | | |
| APPLICATION | | MATERIAL HT200 (Cast Iron) | | |
| | | FINISH Grey Paint | | |
| | | DO NOT SCALE DRAWING | | |

MASTERDRIVE®
POWER TRANSMISSION PRODUCTS

TITLE: 3C75SF

| SIZE | DWG. NO. | REV |
|---|---|---|
| A | 3C75SF | |

SCALE: 1:4 | WEIGHT: | SHEET 1 OF 1

**PROPRIETARY AND CONFIDENTIAL**

THE INFORMATION CONTAINED IN THIS DRAWING IS THE SOLE PROPERTY OF <INSERT COMPANY NAME HERE>. ANY REPRODUCTION IN PART OR AS A WHOLE WITHOUT THE WRITTEN PERMISSION OF <INSERT COMPANY NAME HERE> IS PROHIBITED.