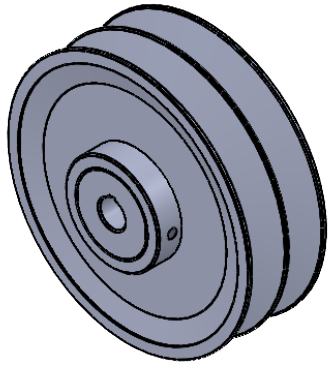

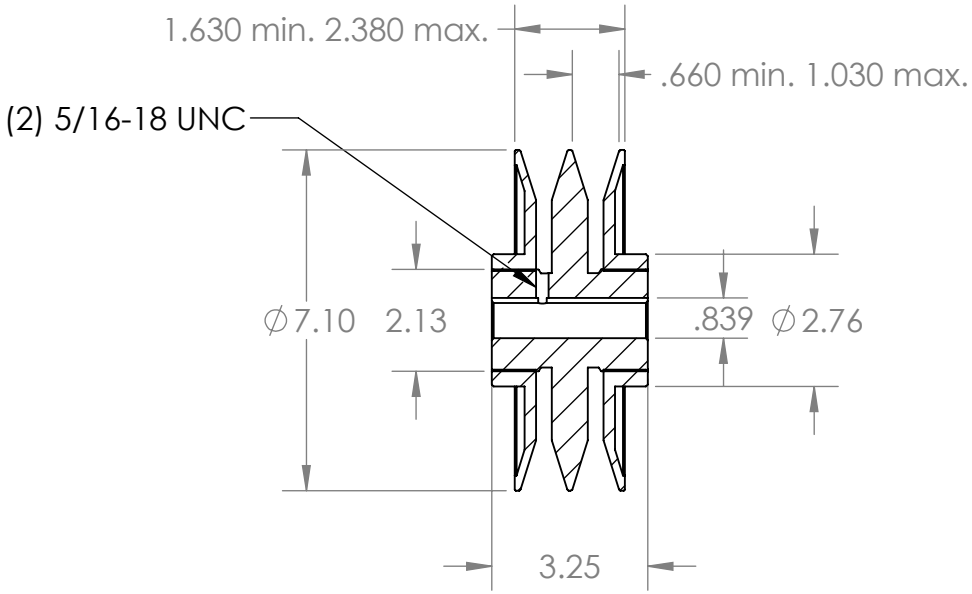


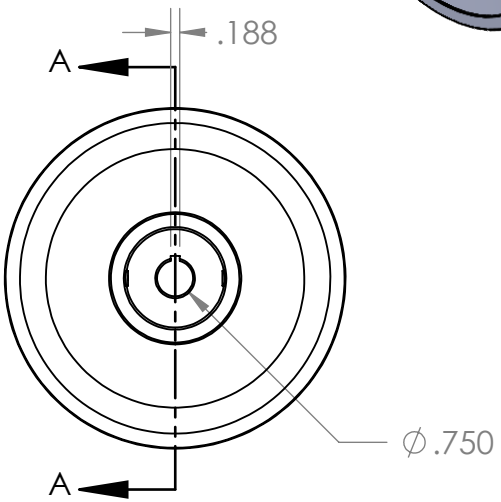


| | | | | NAME | DATE |
|---|---|---|---|---|---|
| | | | DRAWN | EDG | 08/04/21 |
| | | | CHECKED | | |
| | | | ENG APPR. | | |
| | | | MFG APPR. | | |
| | | INTERPRET GEOMETRIC TOLERANCING PER: | Q.A. | | |
| | | MATERIAL HT200 (Cast Iron) | COMMENTS: | | |
| NEXT ASSY | USED ON | FINISH Grey Paint | | | |
| APPLICATION | | DO NOT SCALE DRAWING | | | |

**PROPRIETARY AND CONFIDENTIAL**

THE INFORMATION CONTAINED IN THIS DRAWING IS THE SOLE PROPERTY OF MASTERDRIVE, INC. ANY REPRODUCTION IN PART OR AS A WHOLE WITHOUT THE WRITTEN PERMISSION OF MASTERDRIVE, INC. IS PROHIBITED.

MASTERDRIVE®
POWER TRANSMISSION PRODUCTS

TITLE:

# 2VP71-3/4

| SIZE | DWG. NO. | REV |
|---|---|---|
| A | 2VP71-0.750 | |

SCALE: 1:4 | WEIGHT: | SHEET 1 OF 1