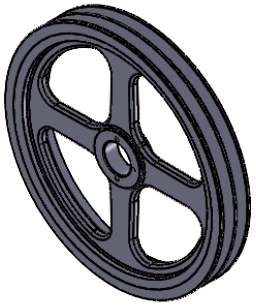

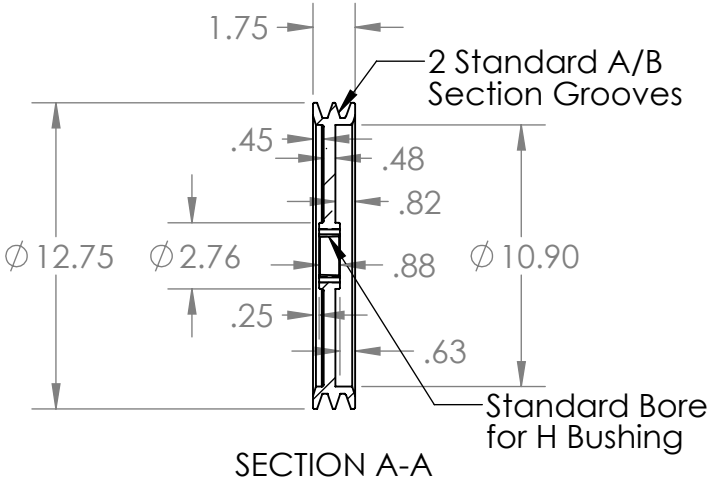


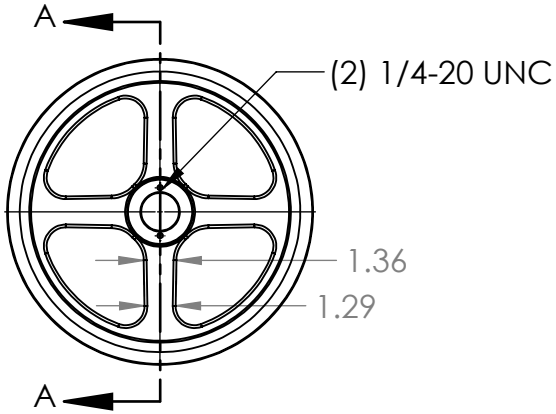


| | | | | NAME | DATE |
|---|---|---|---|---|---|
| | | | DRAWN | EDG | 07/12/21 |
| | | | CHECKED | | |
| | | | ENG APPR. | | |
| | | | MFG APPR. | | |
| | | INTERPRET GEOMETRIC TOLERANCING PER: | Q.A. | | |
| | | MATERIAL HT200 (Cast Iron) | COMMENTS: | | |
| NEXT ASSY | USED ON | FINISH Grey Paint | | | |
| APPLICATION | | DO NOT SCALE DRAWING | | | |

MASTERDRIVE®
POWER TRANSMISSION PRODUCTS

TITLE:
2BK130H

| SIZE | DWG. NO. | REV |
|---|---|---|
| A | 2BK130H | |
| SCALE: 1:8 | WEIGHT: | SHEET 1 OF 1 |

**PROPRIETARY AND CONFIDENTIAL**

THE INFORMATION CONTAINED IN THIS DRAWING IS THE SOLE PROPERTY OF MASTERDRIVE, INC. ANY REPRODUCTION IN PART OR AS A WHOLE WITHOUT THE WRITTEN PERMISSION OF MASTERDRIVE, INC. IS PROHIBITED.