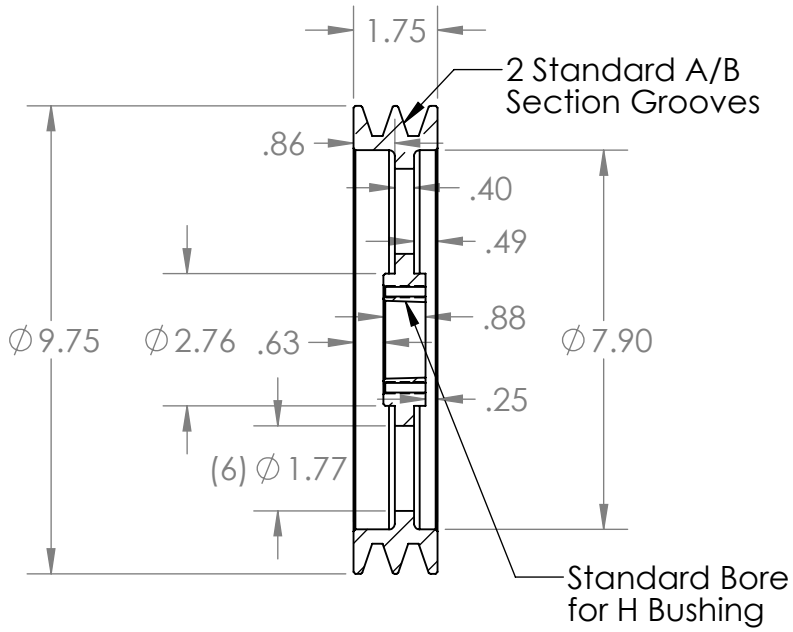

SECTION A-A

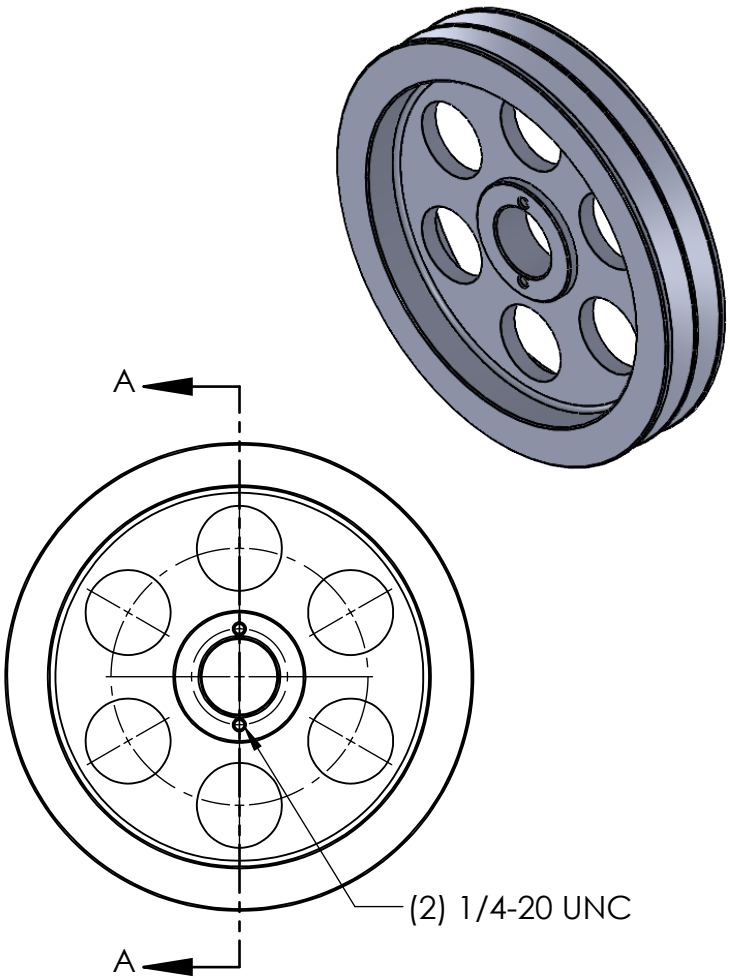

				NAME	DATE
			DRAWN	EDG	07/12/21
			CHECKED		
			ENG APPR.		
			MFG APPR.		
		INTERPRET GEOMETRIC TOLERANCING PER:	Q.A.		
		MATERIAL HT200 (Cast Iron)	COMMENTS:		
NEXT ASSY	USED ON	FINISH Grey Paint			
APPLICATION		DO NOT SCALE DRAWING			

PROPRIETARY AND CONFIDENTIAL

THE INFORMATION CONTAINED IN THIS DRAWING IS THE SOLE PROPERTY OF MASTERDRIVE, INC. ANY REPRODUCTION IN PART OR AS A WHOLE WITHOUT THE WRITTEN PERMISSION OF MASTERDRIVE, INC. IS PROHIBITED.

MASTERDRIVE®
POWER TRANSMISSION PRODUCTS

TITLE:

2BK100H

SIZE	DWG. NO.	REV
A	2BK100H	
SCALE: 1:4	WEIGHT:	SHEET 1 OF 1