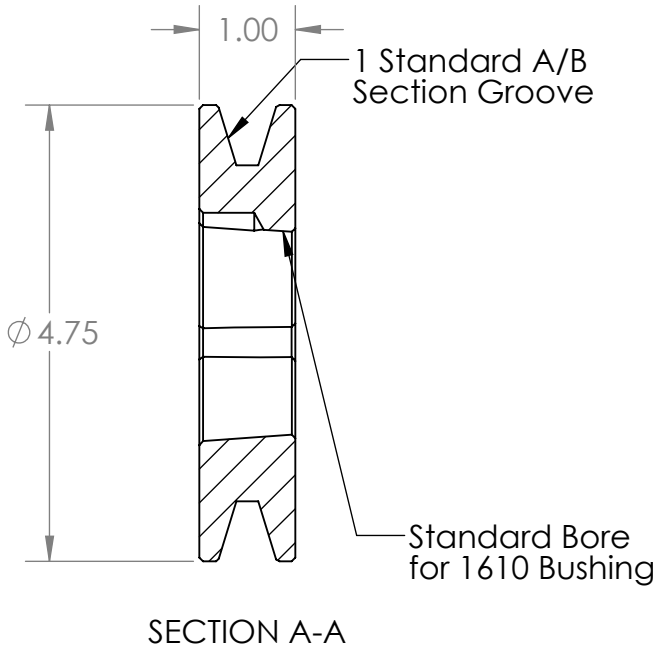

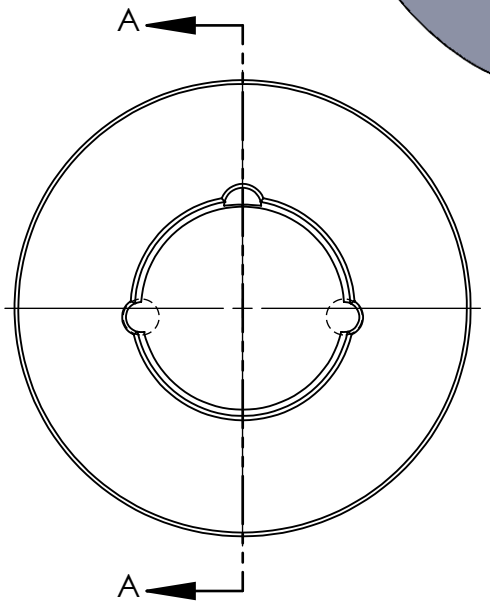

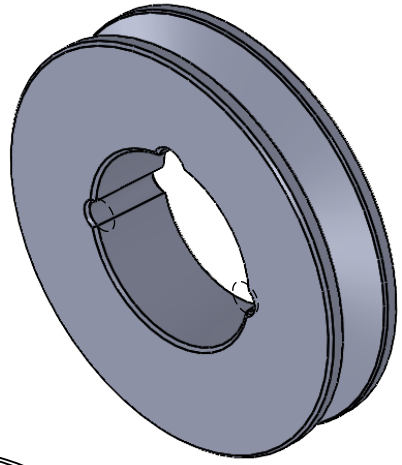

			NAME	DATE
		DRAWN	EDG	08/30/21
		CHECKED		
		ENG APPR.		
		MFG APPR.		
		Q.A.		
		COMMENTS:		
NEXT ASSY	USED ON			
APPLICATION				

INTERPRET GEOMETRIC TOLERANCING PER:

MATERIAL
HT200 (Cast Iron)

FINISH
Grey Paint

DO NOT SCALE DRAWING

PROPRIETARY AND CONFIDENTIAL

THE INFORMATION CONTAINED IN THIS DRAWING IS THE SOLE PROPERTY OF MASTERDRIVE, INC. ANY REPRODUCTION IN PART OR AS A WHOLE WITHOUT THE WRITTEN PERMISSION OF MASTERDRIVE, INC. IS PROHIBITED.

MASTERDRIVE®
POWER TRANSMISSION PRODUCTS

TITLE:
1B44-1610

SIZE	DWG. NO.	REV
A	1B44-1610	

SCALE: 1:2 | WEIGHT: | SHEET 1 OF 1