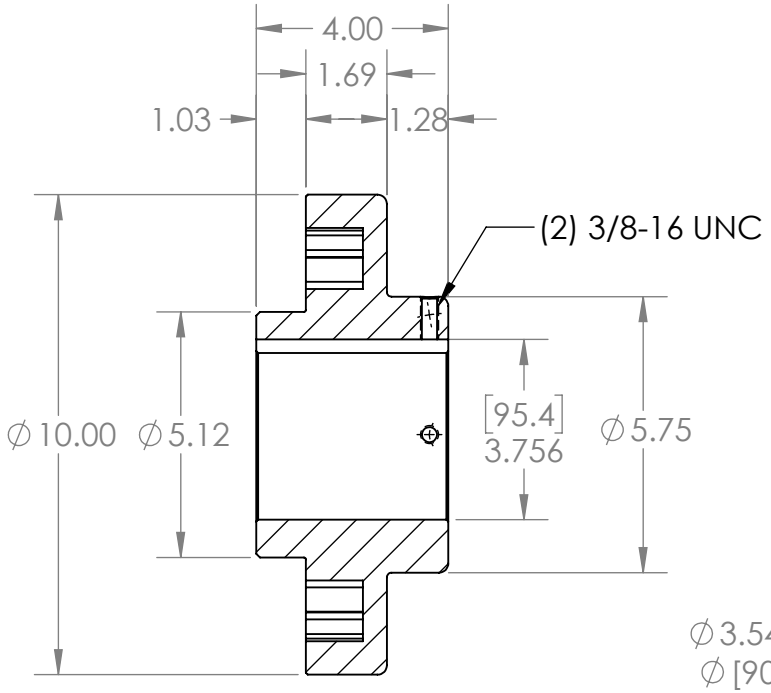

SECTION A-A

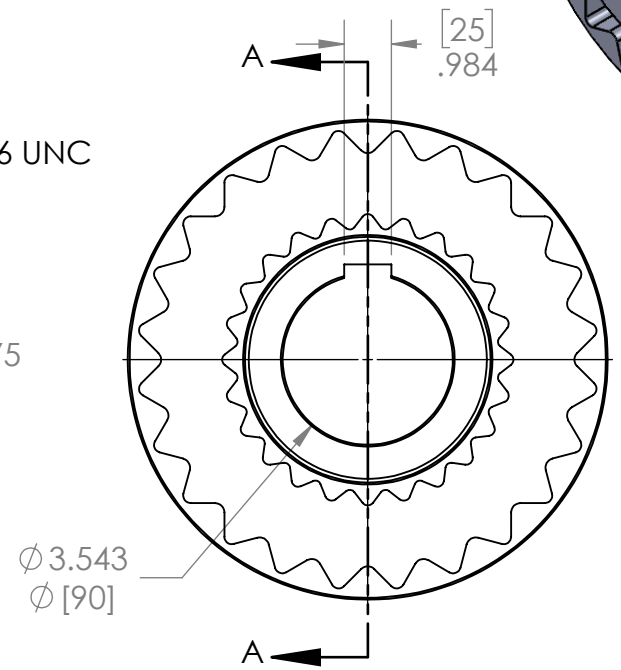

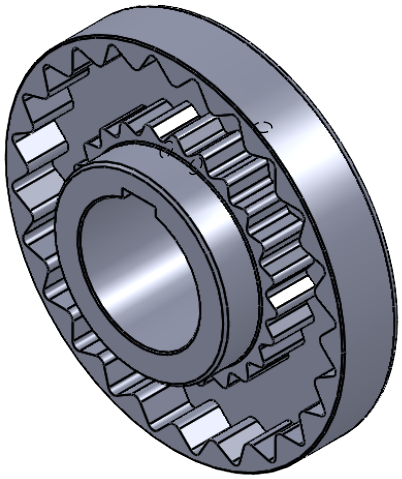

				NAME	DATE
			DRAWN	EDG	08/09/23
			CHECKED		
			ENG APPR.		
			MFG APPR.		
		INTERPRET GEOMETRIC TOLERANCING PER:	Q.A.		
		MATERIAL HT200 (Cast Iron)	COMMENTS:		
NEXT ASSY	USED ON	FINISH Grey Paint			
APPLICATION		DO NOT SCALE DRAWING			

MASTERDRIVE®
POWER TRANSMISSION PRODUCTS

TITLE:
12S-90MM

SIZE	DWG. NO.	REV
A	12S-90MM	

SCALE: 1:4 | WEIGHT: | SHEET 1 OF 1

PROPRIETARY AND CONFIDENTIAL

THE INFORMATION CONTAINED IN THIS DRAWING IS THE SOLE PROPERTY OF MASTERDRIVE, INC. ANY REPRODUCTION IN PART OR AS A WHOLE WITHOUT THE WRITTEN PERMISSION OF MASTERDRIVE, INC. IS PROHIBITED.