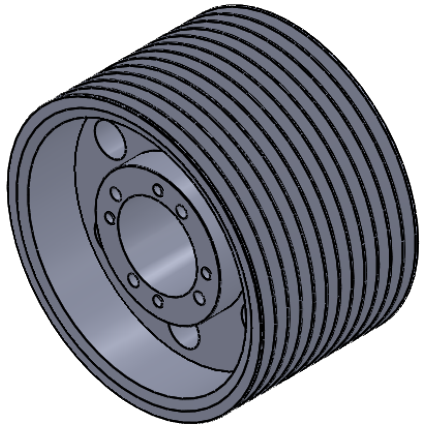

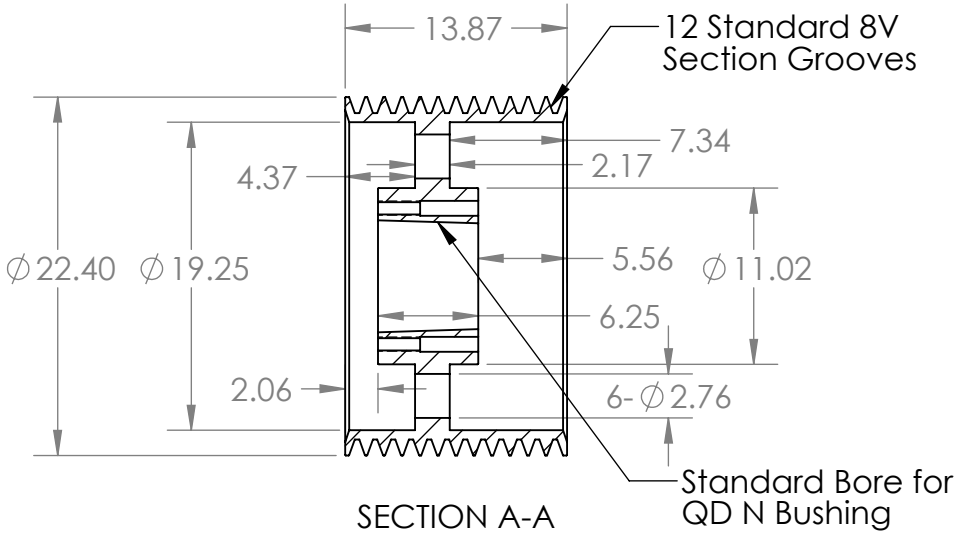


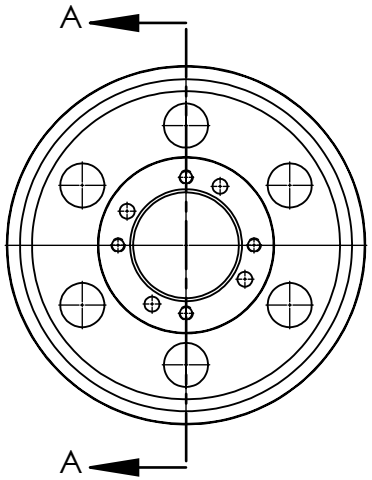


| | NAME | DATE |
|---|---|---|
| DRAWN | EDG | 07/15/20 |
| CHECKED | | |
| ENG APPR. | | |
| MFG APPR. | | |
| Q.A. | | |

COMMENTS:

INTERPRET GEOMETRIC TOLERANCING PER:

MATERIAL
HT200 (Cast Iron)

FINISH
Grey Paint

DO NOT SCALE DRAWING

| NEXT ASSY | USED ON |
|---|---|
| APPLICATION | |

MASTERDRIVE®
POWER TRANSMISSION PRODUCTS

TITLE:
12/8V2240N

| SIZE | DWG. NO. | REV |
|---|---|---|
| A | 128V2240N | |

SCALE: 1:12 | WEIGHT: | SHEET 1 OF 1

**PROPRIETARY AND CONFIDENTIAL**

THE INFORMATION CONTAINED IN THIS DRAWING IS THE SOLE PROPERTY OF <INSERT COMPANY NAME HERE>. ANY REPRODUCTION IN PART OR AS A WHOLE WITHOUT THE WRITTEN PERMISSION OF <INSERT COMPANY NAME HERE> IS PROHIBITED.