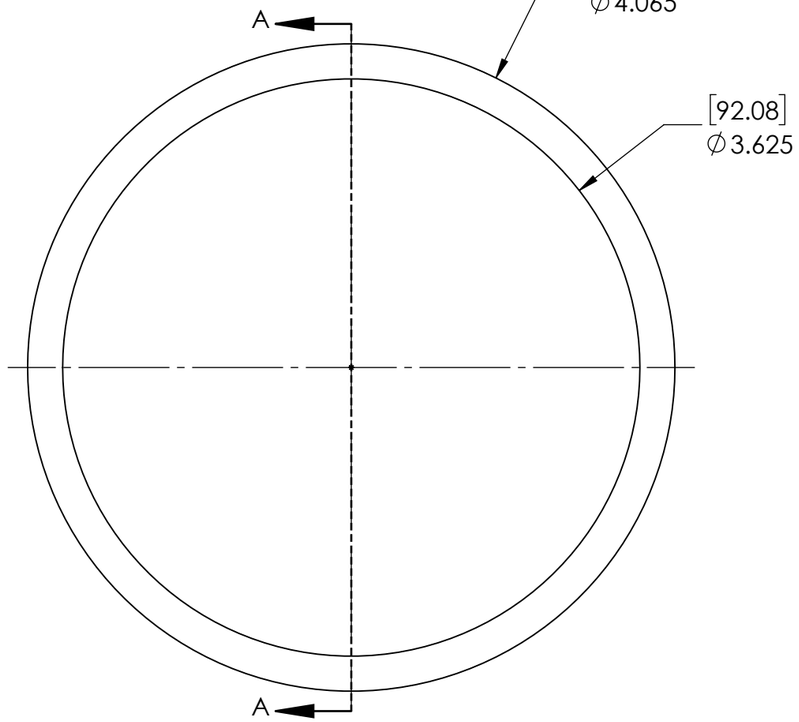

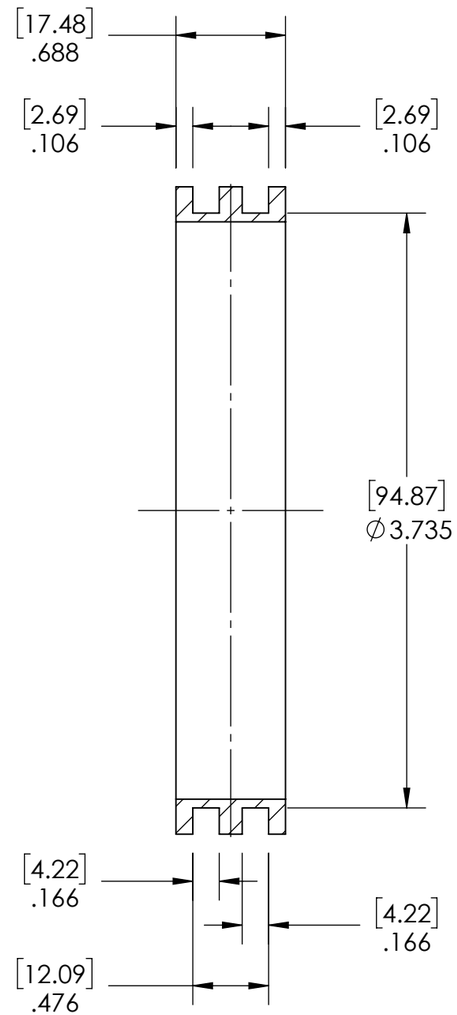

SECTION VIEW A-A

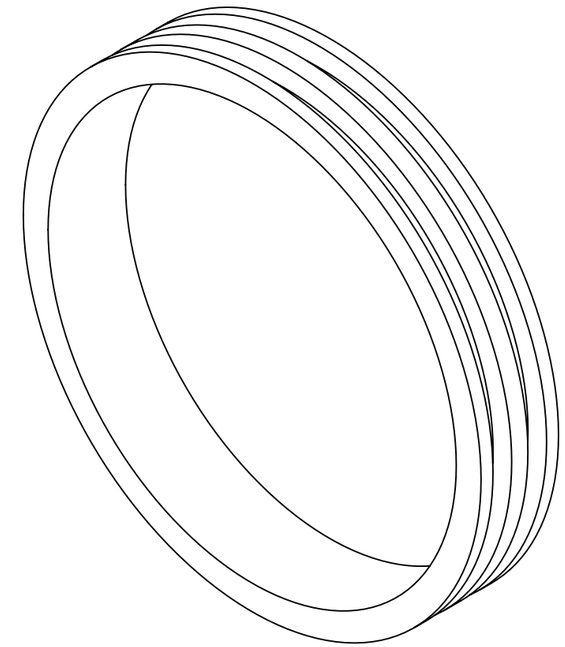

SOLVE INDUSTRIAL MOTION GROUP

SIZE B

PTI

DWG. NO.

WEIGHT	0.11 LBS	
MATERIAL	ALUMINUM	
COATING	N/A	
DRAWN	SEC	03/20/2025
CHECKED	PT	03/20/2025
APPROVED		
THIRD ANGLE PROJECTION		

PROPRIETARY AND CONFIDENTIAL
THE INFORMATION CONTAINED IN THIS DRAWING IS THE SOLE PROPERTY OF Solve IMG. ANY REPRODUCTION IN PART OR AS A WHOLE WITHOUT THE WRITTEN PERMISSION OF Solve IMG IS PROHIBITED.

DATE	BY	REVISION DESCRIPTION	REV

ITEM DESCRIPTION:

LER82

SCALE 1:1

REV -