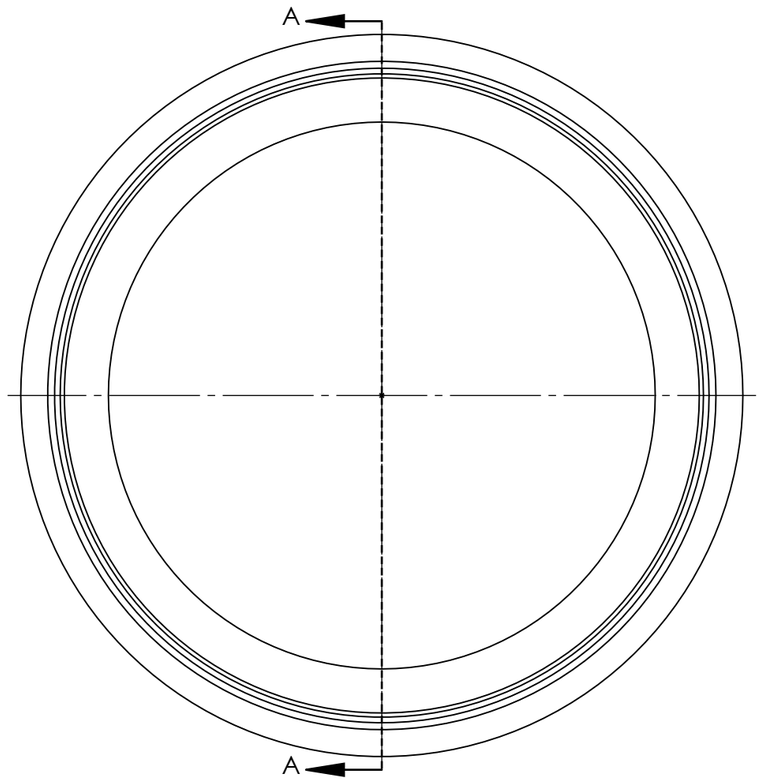

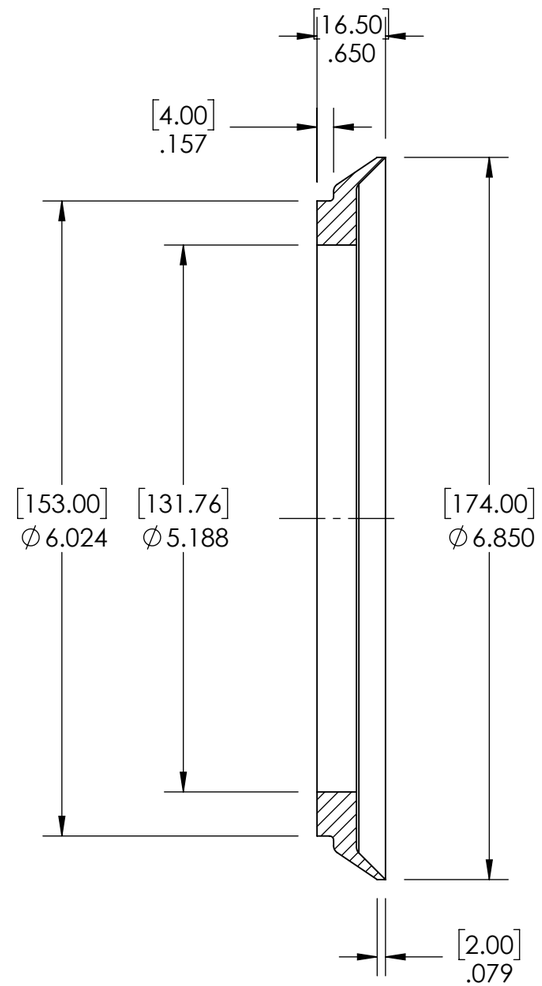

SECTION VIEW A-A

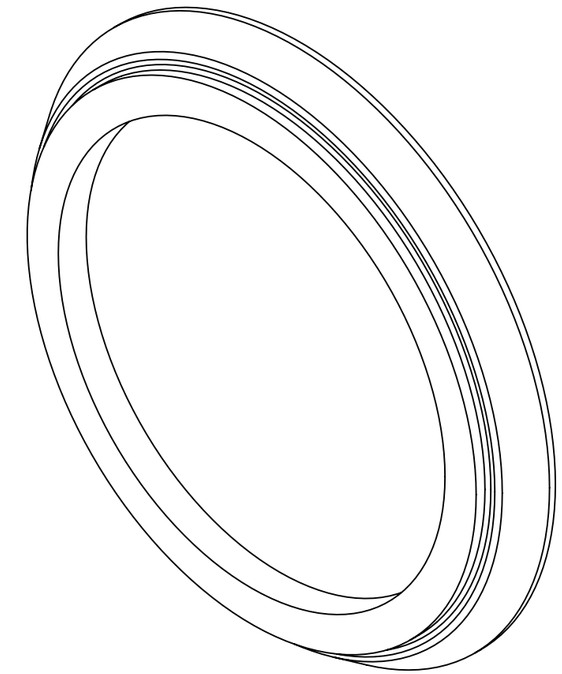

SOLVE INDUSTRIAL MOTION GROUP	WEIGHT	0.17 LBS				
	MATERIAL	NBR				
	COATING	N/A				
	DRAWN	SEC	03/11/2025			
SIZE B PTI	CHECKED	PT	03/20/2025			
	APPROVED			DATE	BY	REVISION DESCRIPTION	REV
	THIRD ANGLE PROJECTION			ITEM DESCRIPTION:			SCALE 1:1
DWG. NO.	PROPRIETARY AND CONFIDENTIAL THE INFORMATION CONTAINED IN THIS DRAWING IS THE SOLE PROPERTY OF Solve IMG. ANY REPRODUCTION IN PART OR AS A WHOLE WITHOUT THE WRITTEN PERMISSION OF Solve IMG IS PROHIBITED.			LER125DC			REV -