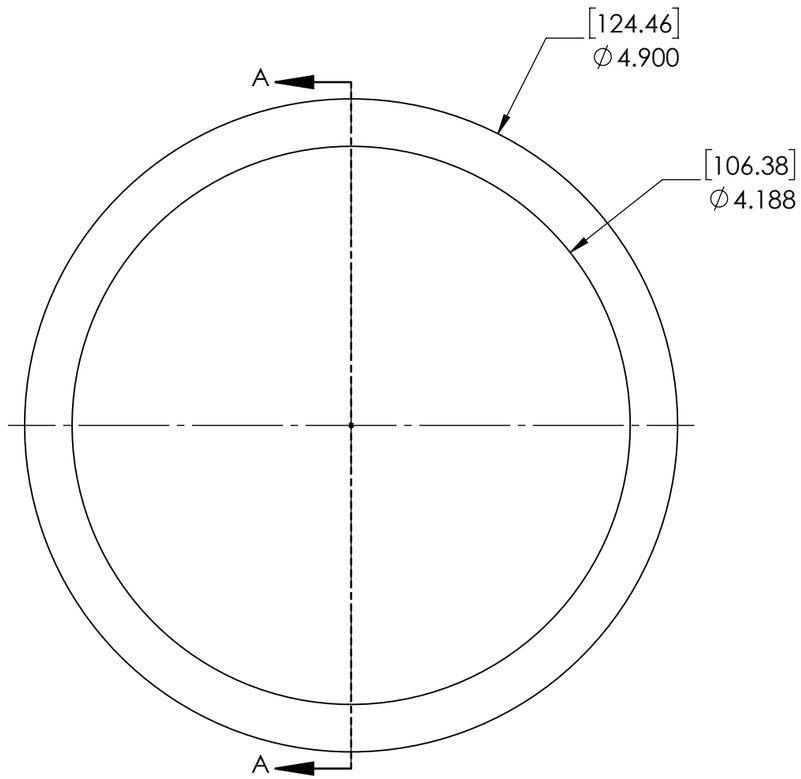

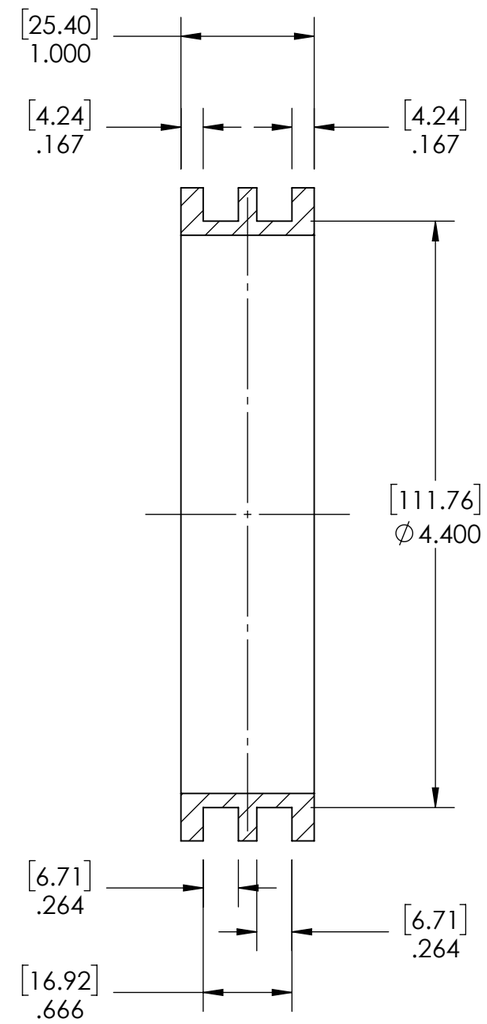

SECTION VIEW A-A

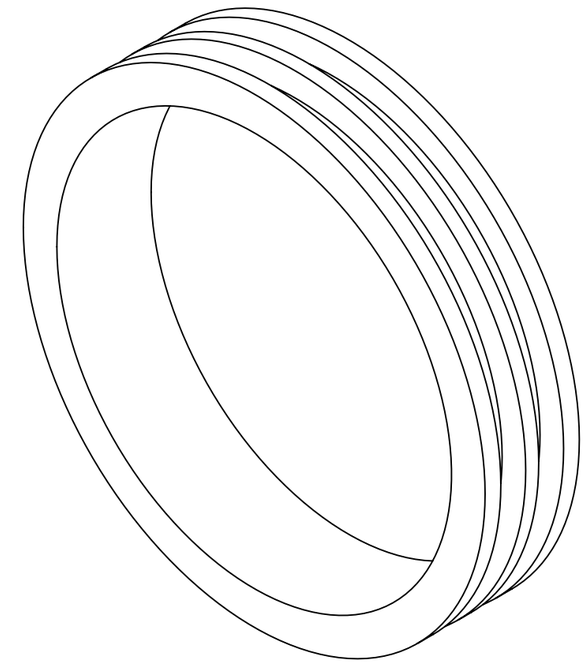

SOLVE INDUSTRIAL MOTION GROUP	WEIGHT	0.31 LBS	
	MATERIAL	ALUMINUM	
	COATING	N/A	
	DRAWN	SEC	03/21/2025
	CHECKED	PT	03/21/2025
SIZE B PTI	APPROVED		
	THIRD ANGLE PROJECTION		
DWG. NO.	PROPRIETARY AND CONFIDENTIAL THE INFORMATION CONTAINED IN THIS DRAWING IS THE SOLE PROPERTY OF Solve IMG. ANY REPRODUCTION IN PART OR AS A WHOLE WITHOUT THE WRITTEN PERMISSION OF Solve IMG IS PROHIBITED.		

DATE	BY	REVISION DESCRIPTION	REV

ITEM DESCRIPTION: LER113

SCALE 1:1

REV -