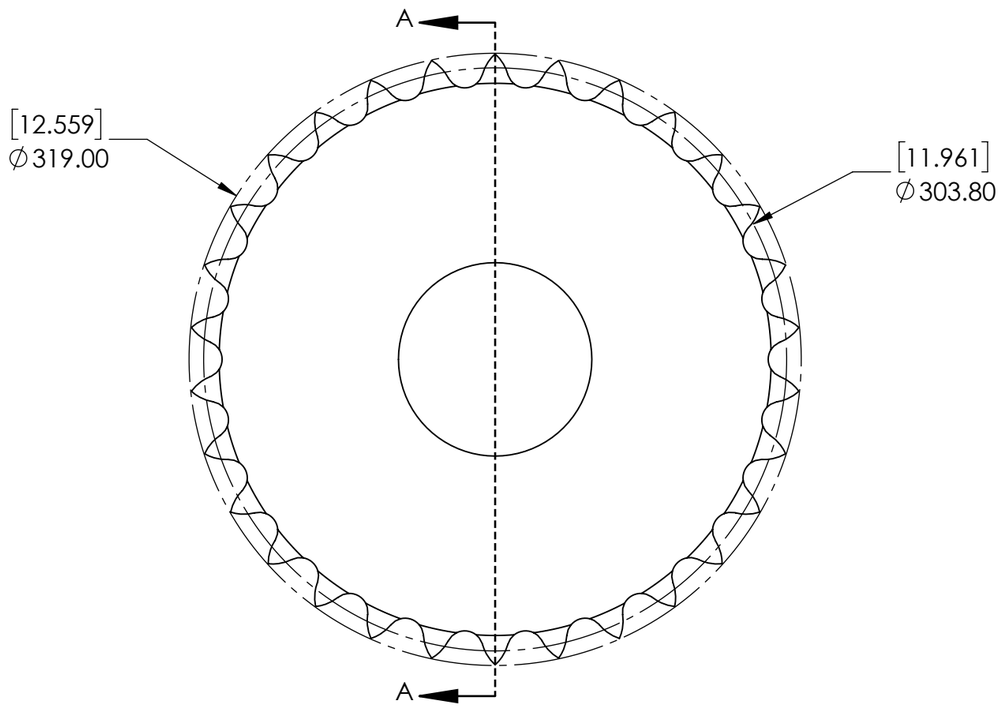

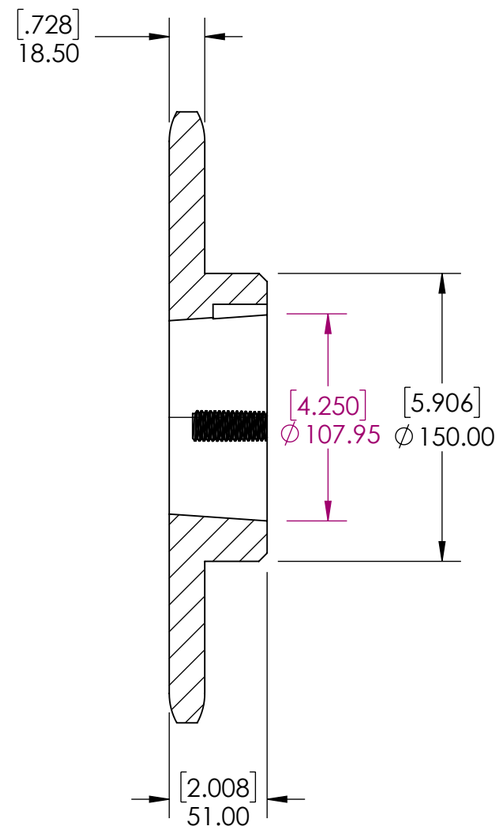

SECTION A-A

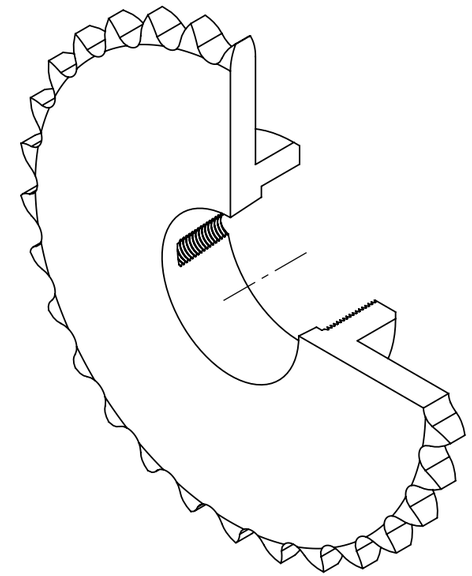

SPROCKETS SPECIFICATIONS	
UNITS	mm [INCH]
CHAIN SIZE	208
PITCH	31.75 mm
INNER WIDTH	19.56 mm
ROLLER DIA.	19.05 mm
TOOTH WIDTH	18.50 mm
NUMBER OF TEETH	30
HUB STYLE	B
BORE TYPE	FOR TAPER BUSHING
BUSHING NUMBER	3020

SOLVE INDUSTRIAL MOTION GROUP

SIZE B

PTI

DWG. NO.

WEIGHT	24.32 LBS	
MATERIAL	STEEL	
COATING	BLACK OXIDE	
DRAWN	SEC	07/21/2025
CHECKED	EG	07/24/2025
APPROVED		
THIRD ANGLE PROJECTION		

PROPRIETARY AND CONFIDENTIAL
THE INFORMATION CONTAINED IN THIS DRAWING IS THE SOLE PROPERTY OF Solve IMG. ANY REPRODUCTION IN PART OR AS A WHOLE WITHOUT THE WRITTEN PERMISSION OF Solve IMG IS PROHIBITED.

DATE	BY	REVISION DESCRIPTION	REV

ITEM DESCRIPTION:

20B-30TL-3020

SCALE 1:1

REV -