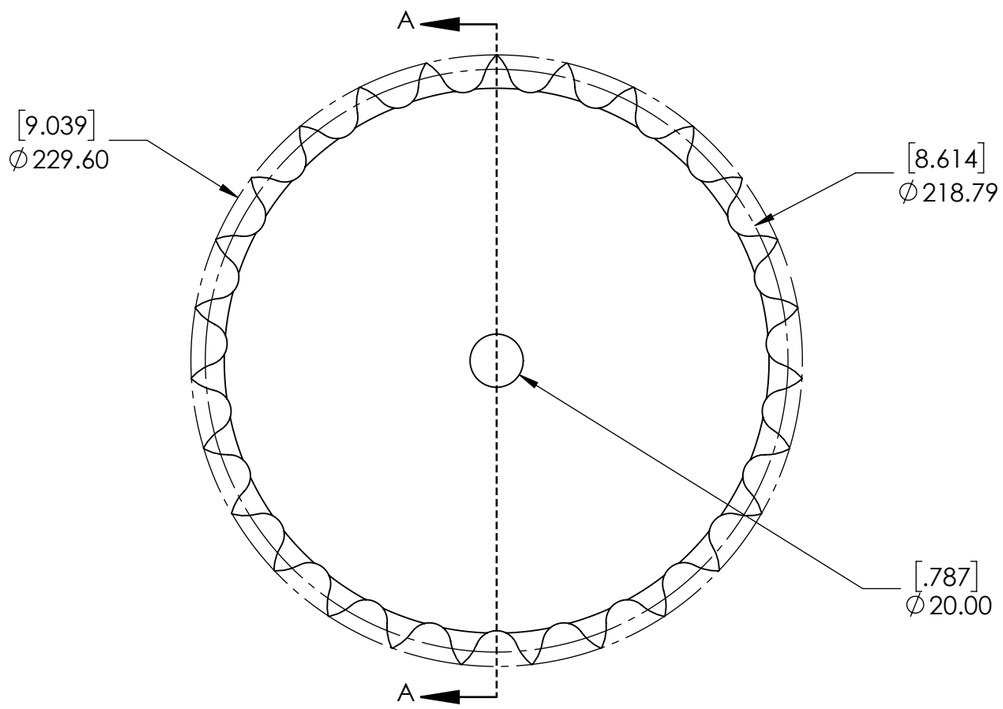

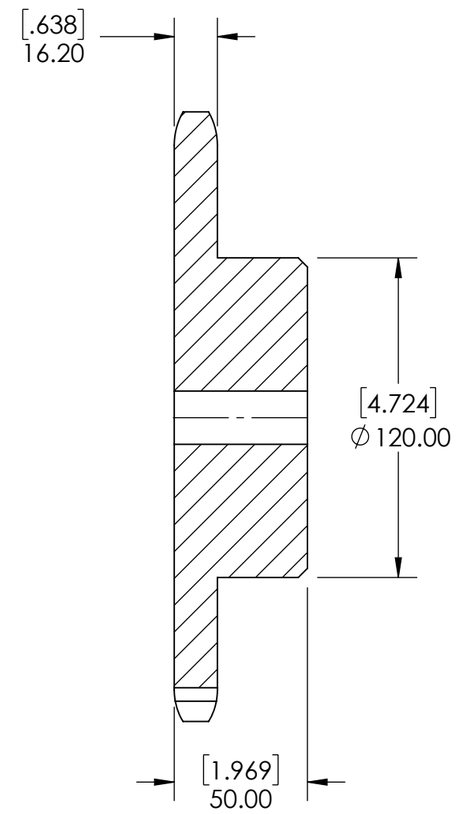

SECTION A-A

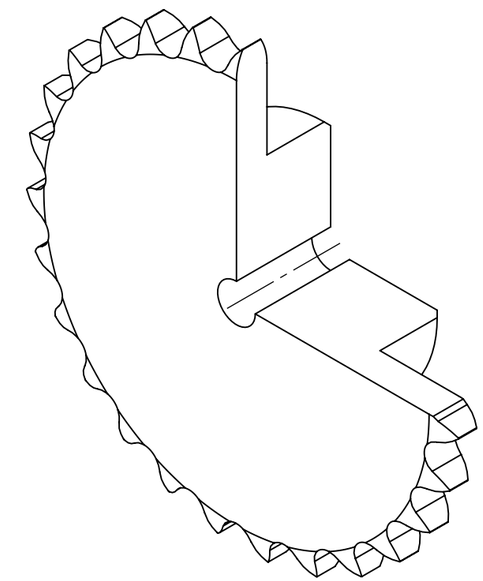

SPROCKETS SPECIFICATIONS	
UNITS	mm [INCH]
CHAIN SIZE	16B
PITCH	25.40 mm
INNER WIDTH	17.02 mm
ROLLER DIA.	15.88 mm
TOOTH WIDTH	16.20 mm
NUMBER OF TEETH	27
HUB STYLE	B
BORE TYPE	PLAIN BORE
BUSHING NUMBER	N/A

SOLVE INDUSTRIAL MOTION GROUP

SIZE B PTI

DWG. NO.

WEIGHT	16.21 LBS	
MATERIAL	STEEL	
COATING	BLACK OXIDE	
DRAWN	SEC	07/21/2025
CHECKED		
APPROVED		
THIRD ANGLE PROJECTION		

PROPRIETARY AND CONFIDENTIAL
THE INFORMATION CONTAINED IN THE DRAWING IS THE SOLE PROPERTY OF Solve IMG. ANY REPRODUCTION IN PART OR AS A WHOLE WITHOUT THE WRITTEN PERMISSION OF Solve IMG IS PROHIBITED.

DATE	BY	REVISION DESCRIPTION	REV

ITEM DESCRIPTION:

16B-27B

SCALE 1:1

REV -