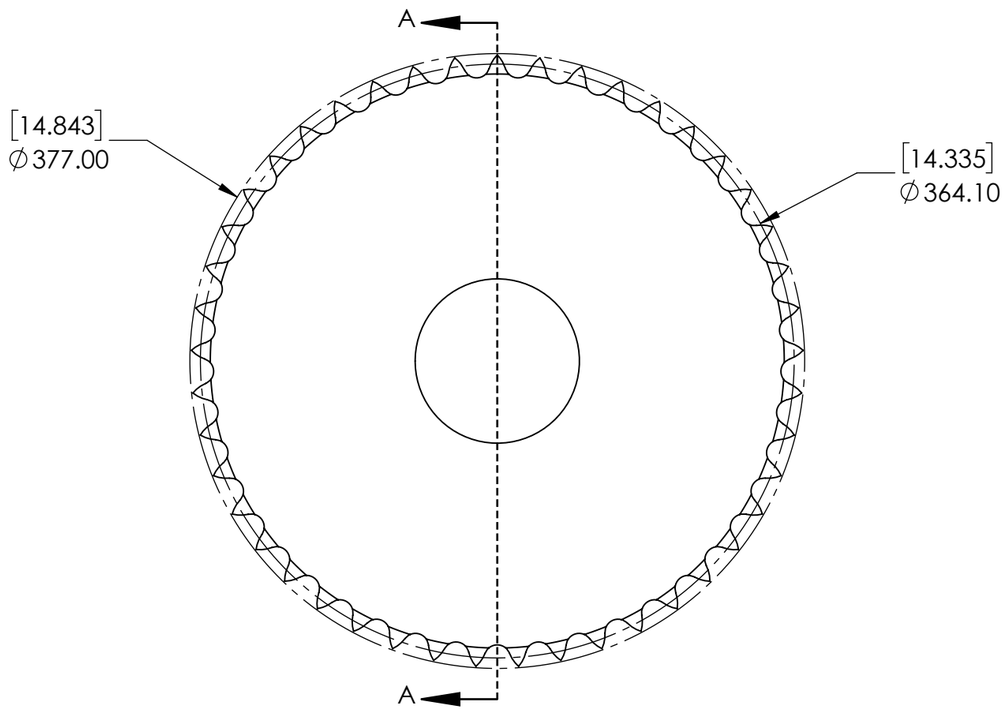

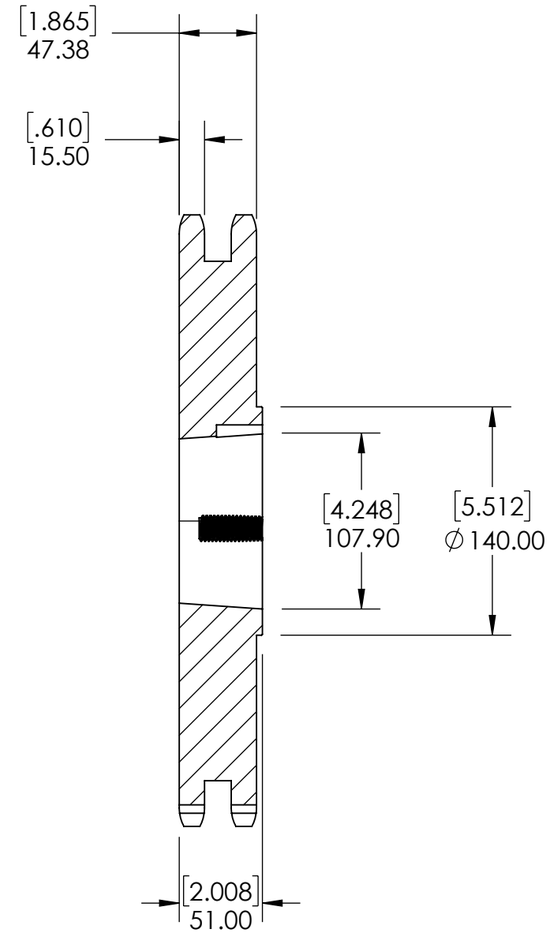

SECTION A-A

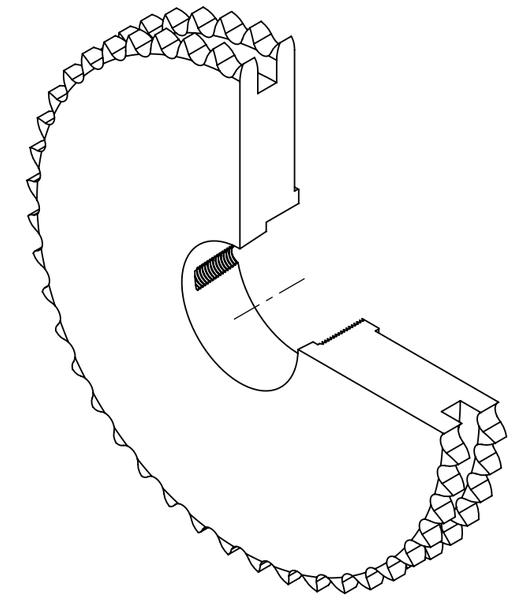

SPROCKETS SPECIFICATIONS	
UNITS	mm [INCH]
CHAIN SIZE	16B
PITCH	25.40 mm
INNER WIDTH	17.02 mm
ROLLER DIA.	15.88 mm
TOOTH WIDTH	15.50 mm
NUMBER OF TEETH	45
HUB STYLE	B
BORE TYPE	FOR TAPER BUSHING
BUSHING NUMBER	3020

SOLVE INDUSTRIAL MOTION GROUP

SIZE B

PTI

DWG. NO.

WEIGHT	69.75 LBS	
MATERIAL	STEEL	
COATING	BLACK OXIDE	
DRAWN	SEC	08/05/2025
CHECKED	SEC	08/05/2025
APPROVED		
THIRD ANGLE PROJECTION		

PROPRIETARY AND CONFIDENTIAL

THE INFORMATION CONTAINED IN THIS DRAWING IS THE SOLE PROPERTY OF Solve IMG . ANY REPRODUCTION IN PART OR AS A WHOLE WITHOUT THE WRITTEN PERMISSION OF Solve IMG IS PROHIBITED.

DATE	BY	REVISION DESCRIPTION	REV

ITEM DESCRIPTION:

16B-2-45TL-3020

SCALE 1:1

REV -