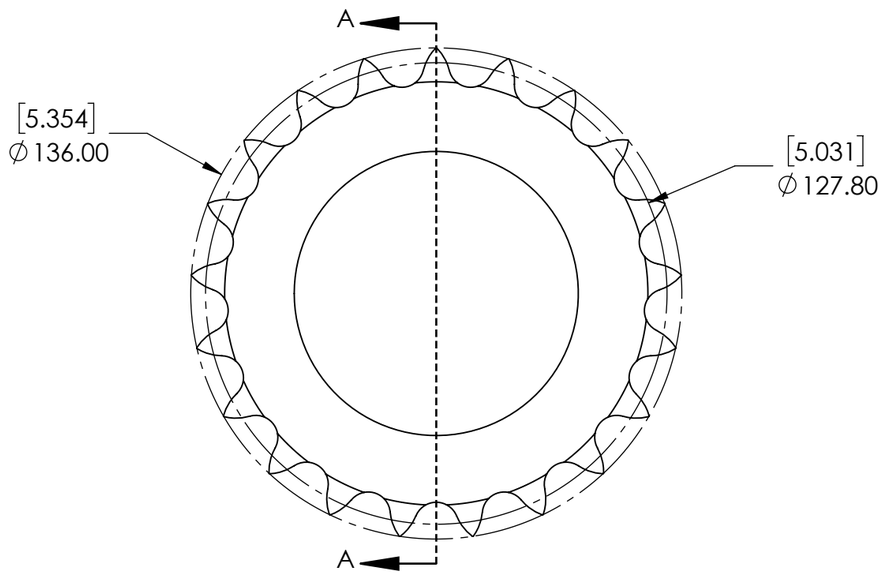

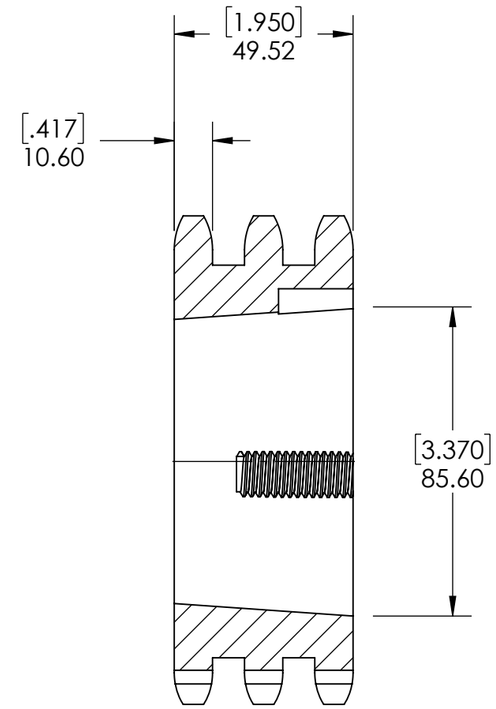

SECTION A-A

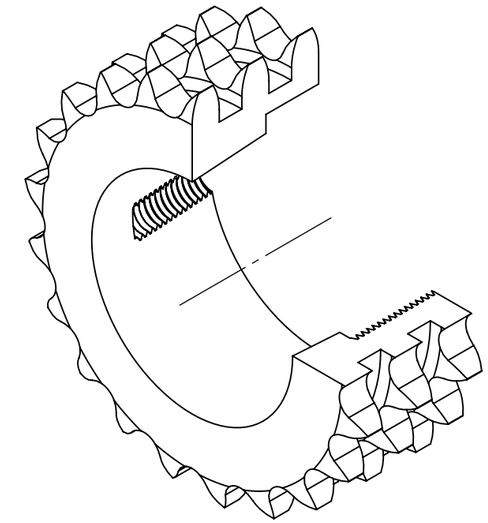

SPROCKETS SPECIFICATIONS	
UNITS	mm [INCH]
CHAIN SIZE	12B
PITCH	19.05 mm
INNER WIDTH	11.68 mm
ROLLER DIA.	12.07 mm
TOOTH WIDTH	10.60 mm
NUMBER OF TEETH	21
HUB STYLE	A
BORE TYPE	FOR TAPER BUSHING
BUSHING NUMBER	2517

SOLVE INDUSTRIAL MOTION GROUP

SIZE B

PTI

DWG. NO.

WEIGHT	4.72 LBS	
MATERIAL	STEEL	
COATING	BLACK OXIDE	
DRAWN	SEC	07/31/2025
CHECKED	SEC	07/31/2025
APPROVED		
THIRD ANGLE PROJECTION		

PROPRIETARY AND CONFIDENTIAL
THE INFORMATION CONTAINED IN THIS DRAWING IS THE SOLE PROPERTY OF Solve IMG. ANY REPRODUCTION IN PART OR AS A WHOLE WITHOUT THE WRITTEN PERMISSION OF Solve IMG IS PROHIBITED.

DATE	BY	REVISION DESCRIPTION	REV

ITEM DESCRIPTION:

12B-3-21TL-2517

SCALE 1:1

REV -