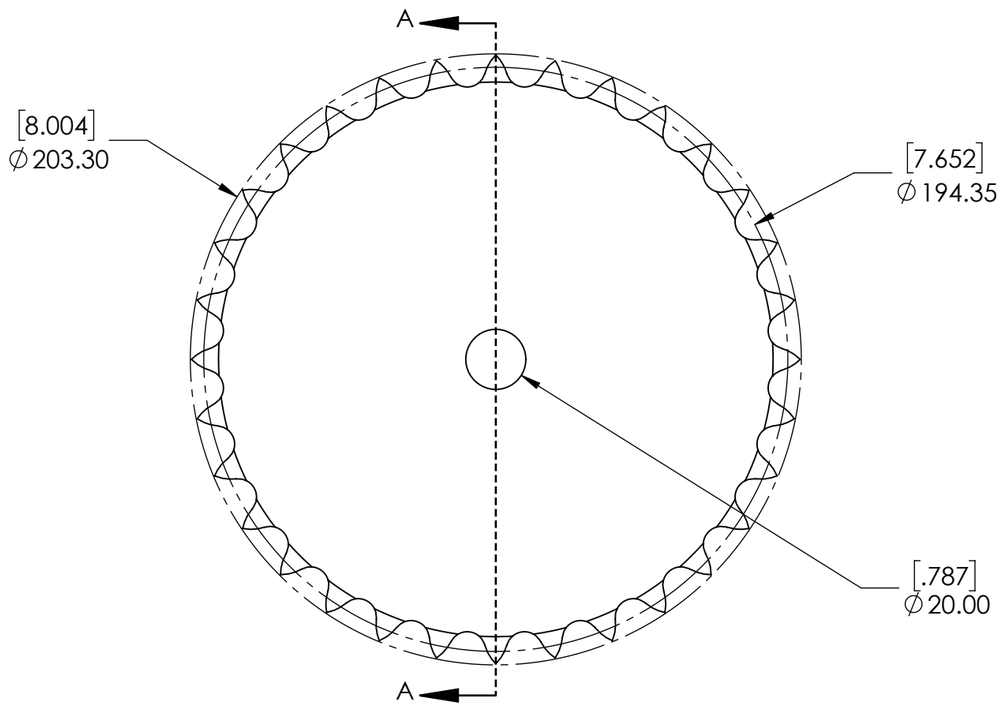

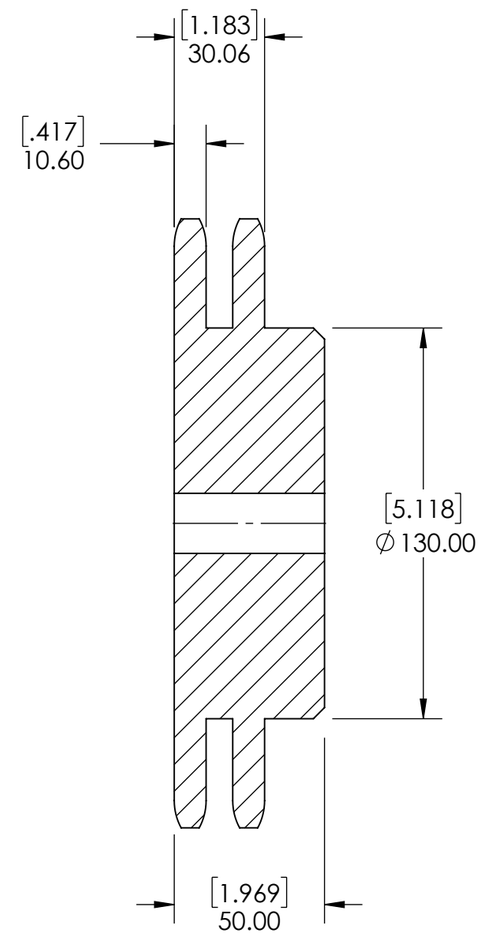

SECTION A-A

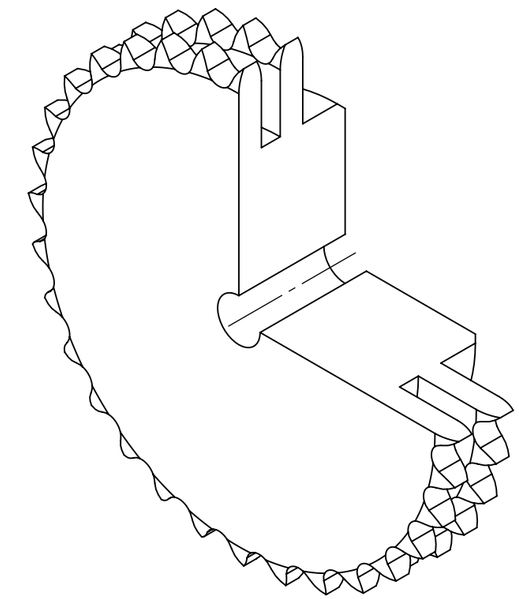

SPROCKETS SPECIFICATIONS	
UNITS	mm [INCH]
CHAIN SIZE	12B
PITCH	19.05 mm
INNER WIDTH	11.68 mm
ROLLER DIA.	12.07 mm
TOOTH WIDTH	10.60 mm
NUMBER OF TEETH	32
HUB STYLE	B
BORE TYPE	PLAIN BORE
BUSHING NUMBER	N/A

SOLVE INDUSTRIAL MOTION GROUP

SIZE B

PTI

DWG. NO.

WEIGHT	16.60 LBS	
MATERIAL	STEEL	
COATING	BLACK OXIDE	
DRAWN	SEC	07/31/2025
CHECKED	PT	08/06/2025
APPROVED		
THIRD ANGLE PROJECTION		

PROPRIETARY AND CONFIDENTIAL

THE INFORMATION CONTAINED IN THIS DRAWING IS THE SOLE PROPERTY OF Solve IMG. ANY REPRODUCTION IN PART OR AS A WHOLE WITHOUT THE WRITTEN PERMISSION OF Solve IMG IS PROHIBITED.

DATE	BY	REVISION DESCRIPTION	REV

ITEM DESCRIPTION:

12B-2-32B

SCALE 1:1

REV -