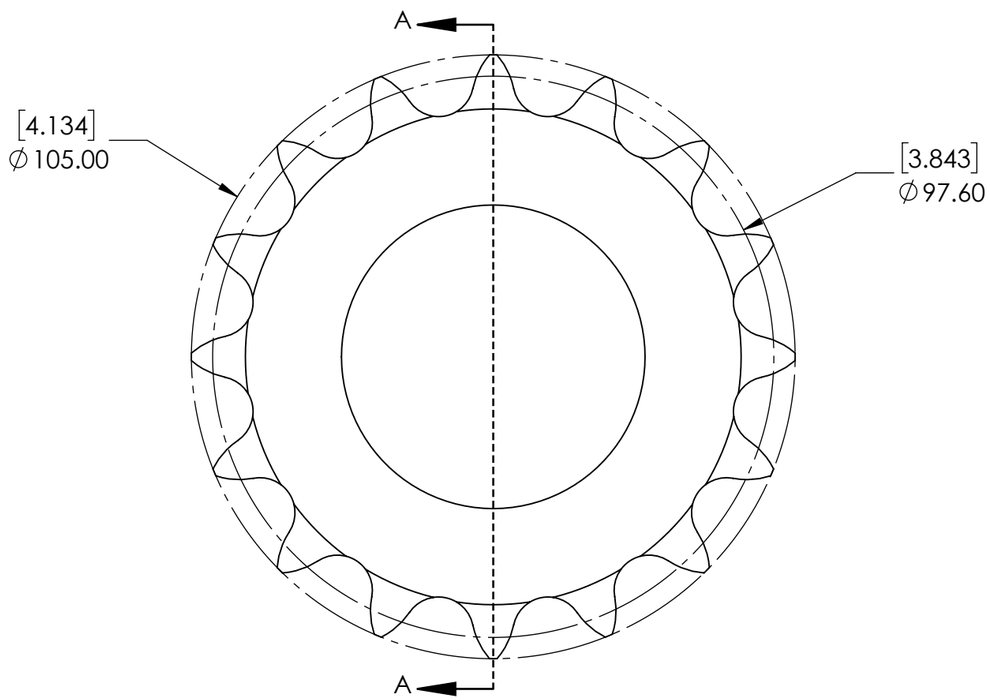


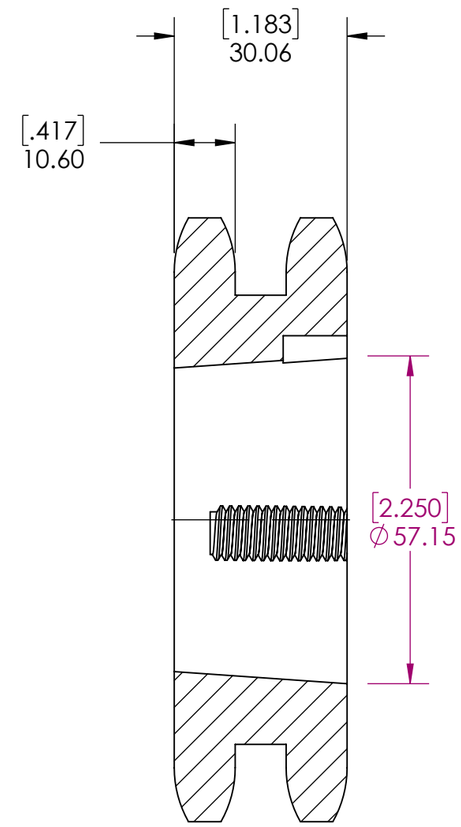


SECTION A-A

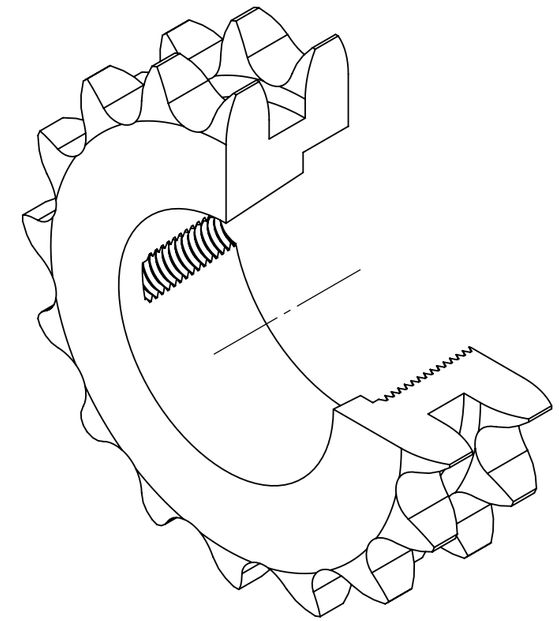

| SPROCKETS SPECIFICATIONS | |
|---|---|
| UNITS | mm [INCH] |
| CHAIN SIZE | 12B |
| PITCH | 19.05 mm |
| INNER WIDTH | 11.68 mm |
| ROLLER DIA. | 12.07 mm |
| TOOTH WIDTH | 10.60 mm |
| NUMBER OF TEETH | 16 |
| HUB STYLE | A |
| BORE TYPE | FOR TAPER BUSHING |
| BUSHING NUMBER | 1610 |

SOLVE INDUSTRIAL MOTION GROUP

SIZE B

PTI

DWG. NO.

| | | |
|---|---|---|
| WEIGHT | 1.93 LBS | |
| MATERIAL | STEEL | |
| COATING | BLACK OXIDE | |
| DRAWN | SEC | 07/31/2025 |
| CHECKED | EG | 07/31/2025 |
| APPROVED | | |
| THIRD ANGLE PROJECTION | | |

**PROPRIETARY AND CONFIDENTIAL**
THE INFORMATION CONTAINED IN THIS DRAWING IS THE SOLE PROPERTY OF Solve IMG . ANY REPRODUCTION IN PART OR AS A WHOLE WITHOUT THE WRITTEN PERMISSION OF Solve IMG IS PROHIBITED.

| DATE | BY | REVISION DESCRIPTION | REV |
|---|---|---|---|
| | | | |
| | | | |
| | | | |
| | | | |

ITEM DESCRIPTION:

12B-2-16TL-1610

SCALE 1:1

REV -