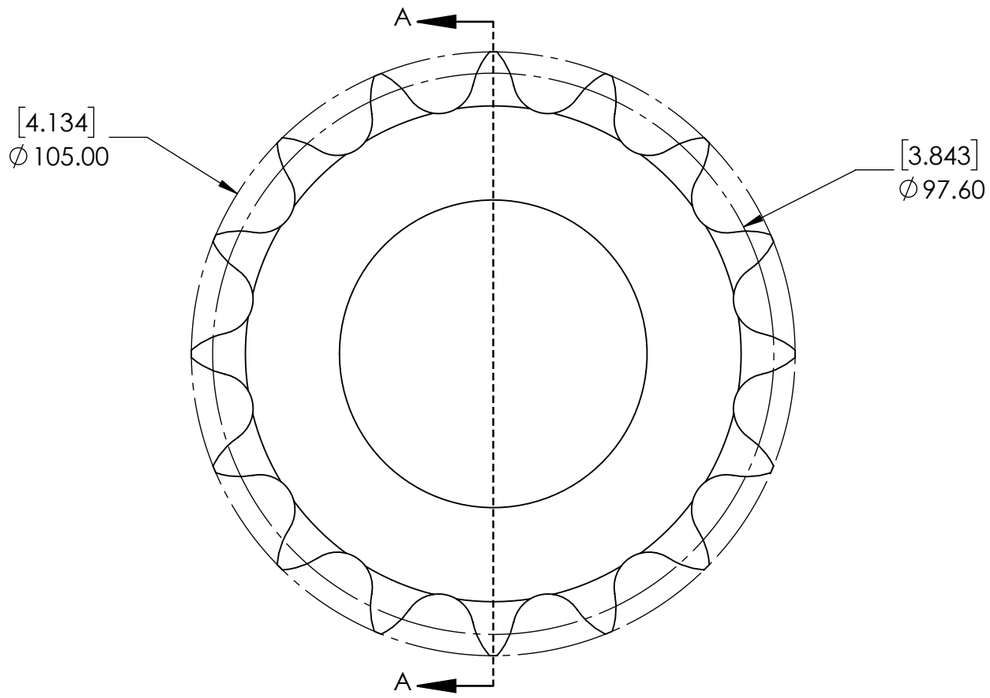

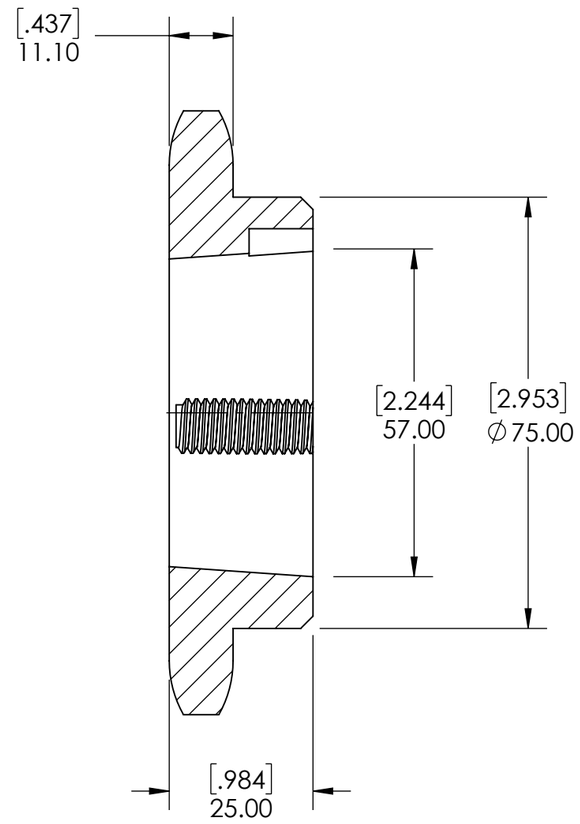

SECTION A-A

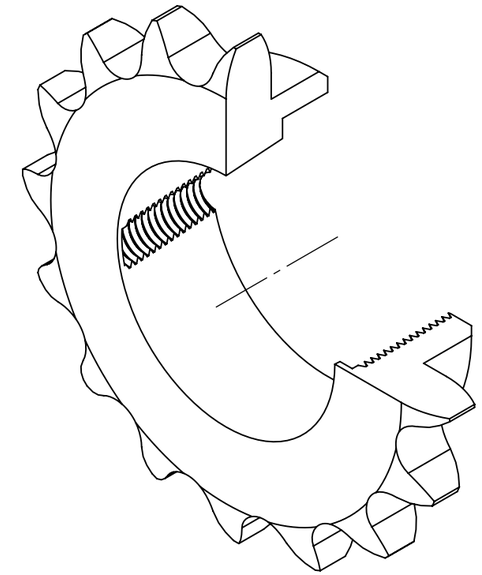

SPROCKETS SPECIFICATIONS	
UNITS	mm [INCH]
CHAIN SIZE	12B
PITCH	19.05 mm
INNER WIDTH	11.68 mm
ROLLER DIA.	12.07 mm
TOOTH WIDTH	11.10 mm
NUMBER OF TEETH	16
HUB STYLE	B
BORE TYPE	FOR TAPER BUSHING
BUSHING NUMBER	1610

SOLVE INDUSTRIAL MOTION GROUP

SIZE B

PTI®

DWG. NO.

WEIGHT	1.28 LBS	
MATERIAL	STEEL	
COATING	BLACK OXIDE	
DRAWN	SEC	07/21/2025
CHECKED	SEC	07/28/2025
APPROVED		
THIRD ANGLE PROJECTION		

PROPRIETARY AND CONFIDENTIAL
THE INFORMATION CONTAINED IN THIS DRAWING IS THE SOLE PROPERTY OF Solve IMG . ANY REPRODUCTION IN PART OR AS A WHOLE WITHOUT THE WRITTEN PERMISSION OF Solve IMG IS PROHIBITED.

DATE	BY	REVISION DESCRIPTION	REV

ITEM DESCRIPTION:

12B-16TL-1610

SCALE 1:1

REV -