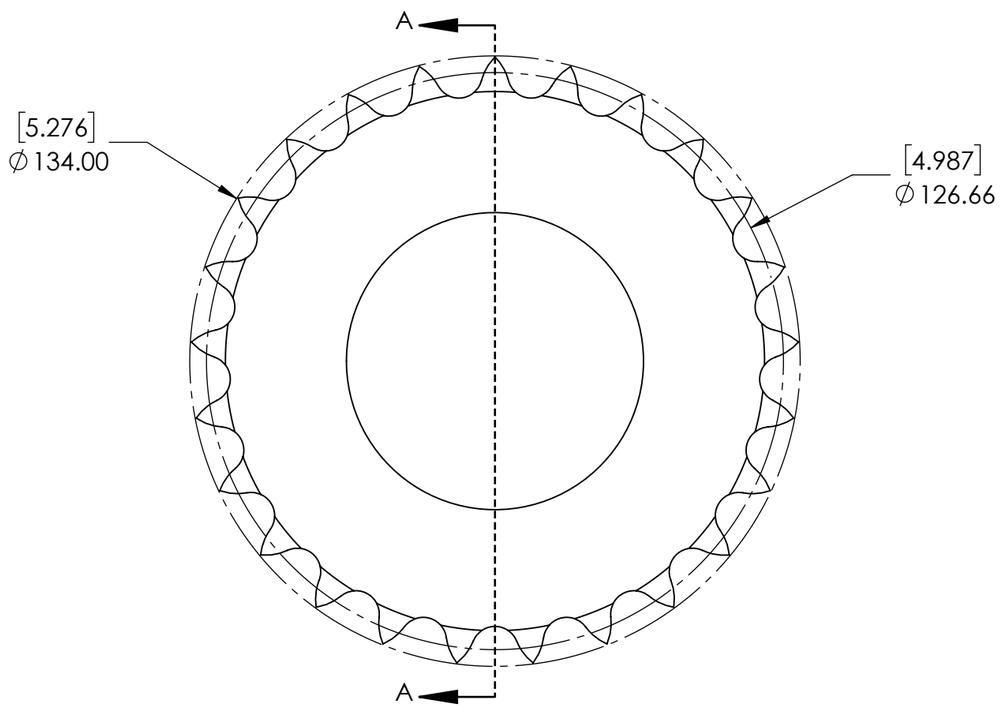

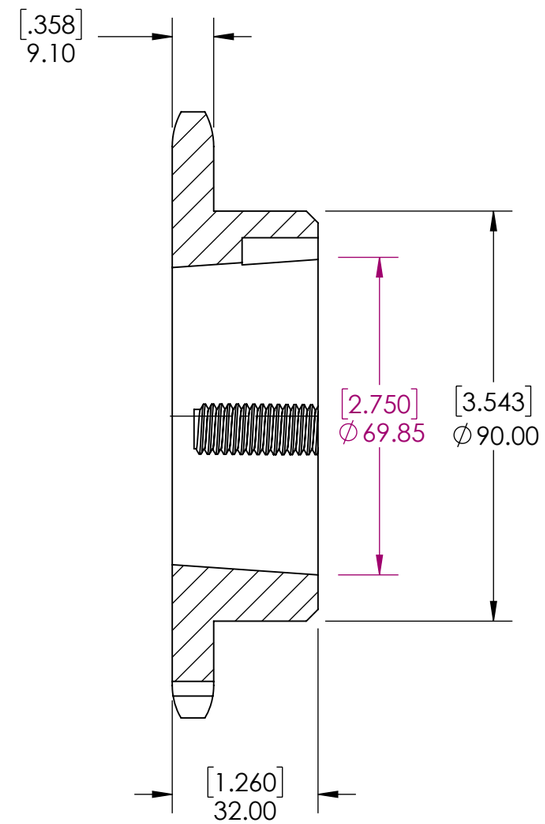

SECTION A-A

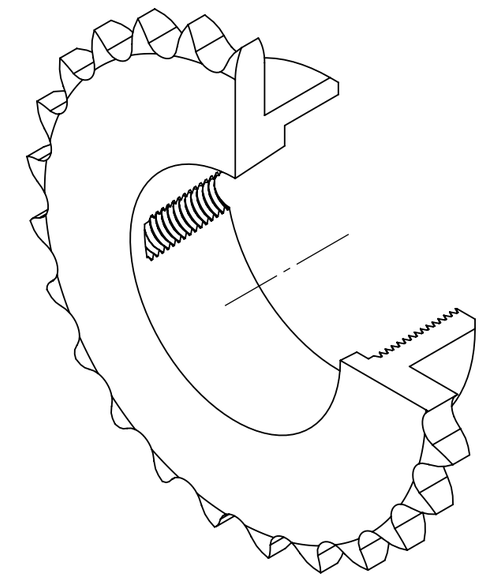

NOTES:
1. HARDENED TEETH.

SPROCKETS SPECIFICATIONS	
UNITS	mm [INCH]
CHAIN SIZE	10B
PITCH	15.88 mm
INNER WIDTH	9.65 mm
ROLLER DIA.	10.16 mm
TOOTH WIDTH	9.10 mm
NUMBER OF TEETH	25
HUB STYLE	B
BORE TYPE	FOR TAPER BUSHING
BUSHING NUMBER	2012

SOLVE INDUSTRIAL MOTION GROUP

SIZE B

PTI

DWG. NO.

WEIGHT	2.33 LBS	
MATERIAL	STEEL	
COATING	BLACK OXIDE	
DRAWN	SEC	07/21/2025
CHECKED	EG	07/23/2025
APPROVED		
THIRD ANGLE PROJECTION		

PROPRIETARY AND CONFIDENTIAL
THE INFORMATION CONTAINED IN THIS DRAWING IS THE SOLE PROPERTY OF Solve IMG. ANY REPRODUCTION IN PART OR AS A WHOLE WITHOUT THE WRITTEN PERMISSION OF Solve IMG IS PROHIBITED.

DATE	BY	REVISION DESCRIPTION	REV

ITEM DESCRIPTION:

10B-25HTL-2012

SCALE 1:1

REV -