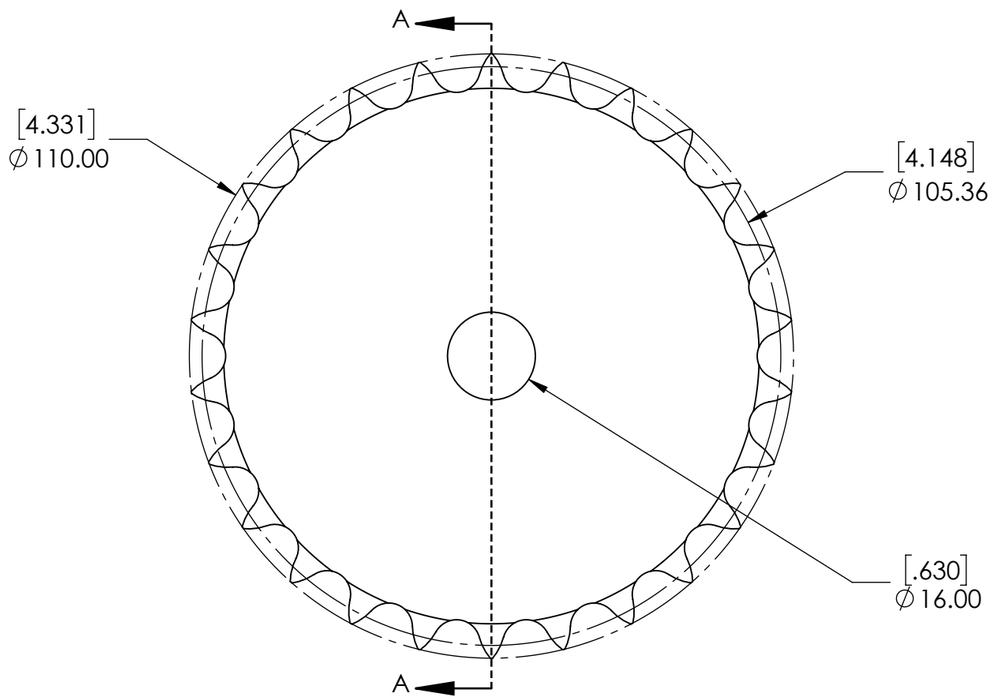

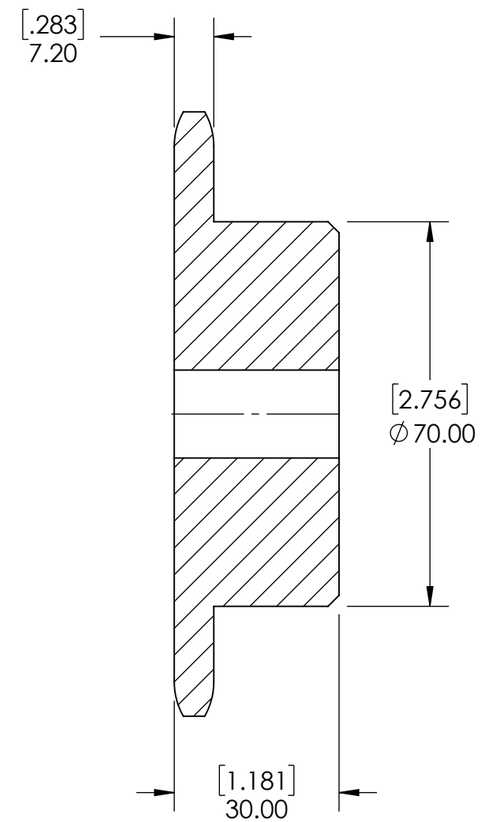

SECTION A-A

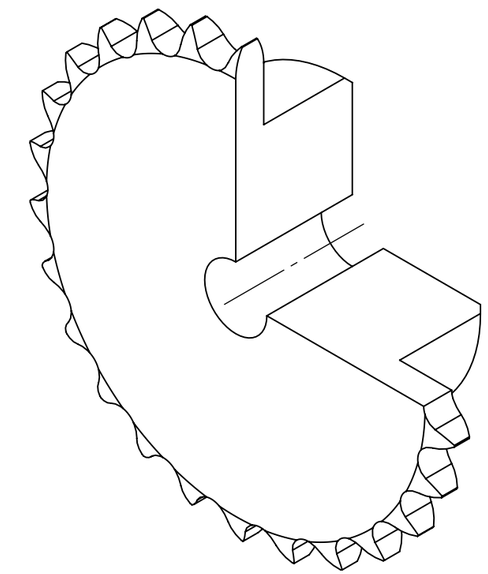

SPROCKETS SPECIFICATIONS	
UNITS	mm [INCH]
CHAIN SIZE	08B
PITCH	12.70 mm
INNER WIDTH	7.75 mm
ROLLER DIA.	8.51 mm
TOOTH WIDTH	7.20 mm
NUMBER OF TEETH	26
HUB STYLE	B
BORE TYPE	PLAIN BORE
BUSHING NUMBER	N/A

SOLVE INDUSTRIAL MOTION GROUP

SIZE B PTI

DWG. NO.

WEIGHT	2.45 LBS	
MATERIAL	STAINLESS STEEL	
COATING	N/A	
DRAWN	SEC	07/21/2025
CHECKED	PT	07/24/2025
APPROVED		
THIRD ANGLE PROJECTION		

PROPRIETARY AND CONFIDENTIAL
THE INFORMATION CONTAINED IN THIS DRAWING IS THE SOLE PROPERTY OF Solve IMG. REPRODUCTION IN PART OR AS A WHOLE WITHOUT THE WRITTEN PERMISSION OF Solve IMG IS PROHIBITED.

DATE	BY	REVISION DESCRIPTION	REV

ITEM DESCRIPTION:

08B-26BSS

SCALE 1:1

REV -