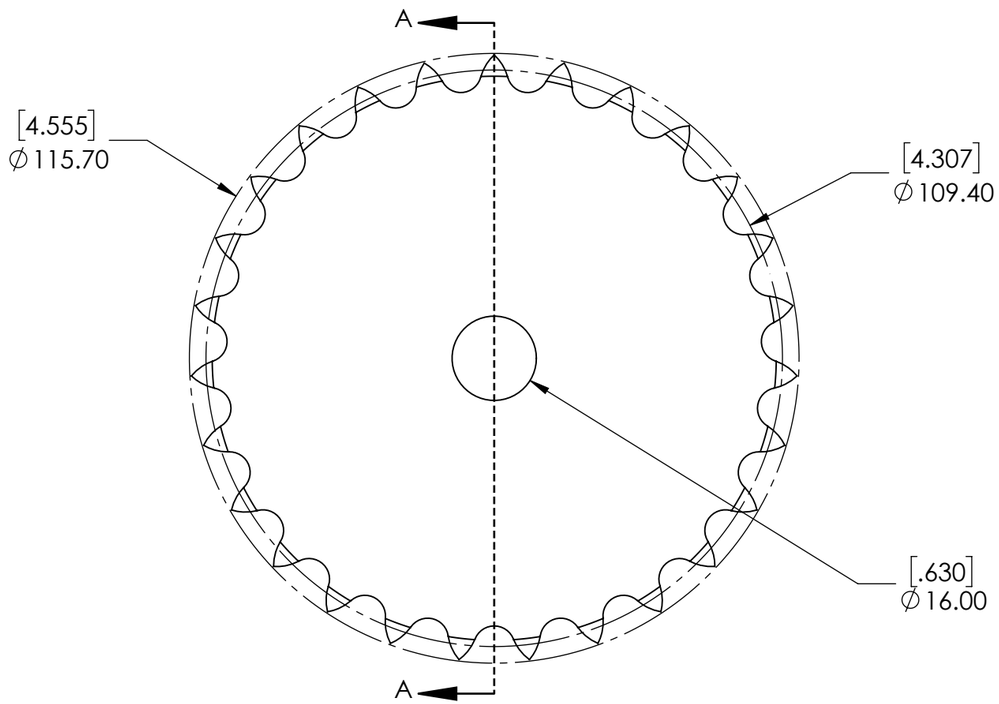

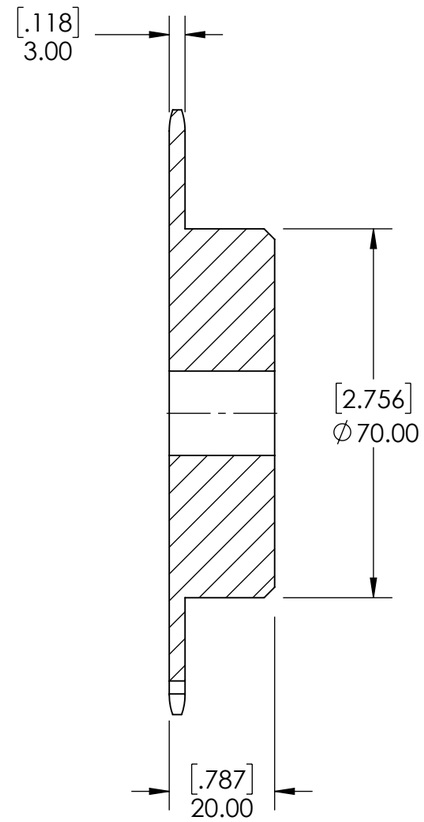

SECTION A-A

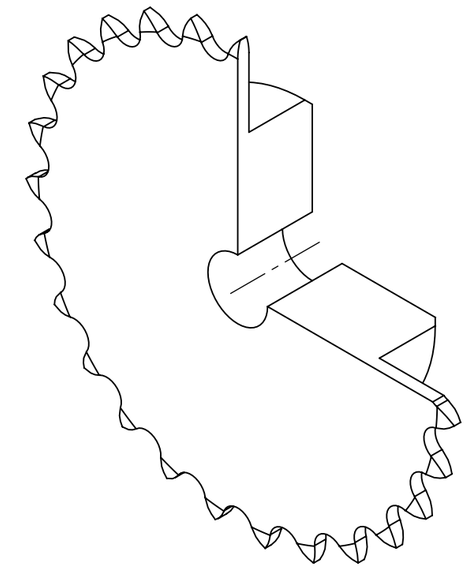

SPROCKETS SPECIFICATIONS	
UNITS	mm [INCH]
CHAIN SIZE	081B
PITCH	12.70 mm
INNER WIDTH	3.30 mm
ROLLER DIA.	7.75 mm
TOOTH WIDTH	3.00 mm
NUMBER OF TEETH	27
HUB STYLE	B
BORE TYPE	PLAIN BORE
BUSHING NUMBER	N/A

SOLVE INDUSTRIAL MOTION GROUP

SIZE B

PTI®

DWG. NO.

WEIGHT	1.52 LBS	
MATERIAL	STEEL	
COATING	BLACK OXIDE	
DRAWN	SEC	08/18/2025
CHECKED	DH	08/18/2025
APPROVED		
THIRD ANGLE PROJECTION		

PROPRIETARY AND CONFIDENTIAL

THE INFORMATION CONTAINED IN THIS DRAWING IS THE SOLE PROPERTY OF Solve IMG. ANY REPRODUCTION IN PART OR AS A WHOLE WITHOUT THE WRITTEN PERMISSION OF Solve IMG IS PROHIBITED.

DATE	BY	REVISION DESCRIPTION	REV

ITEM DESCRIPTION:

081B-27B

SCALE 1:1

REV -