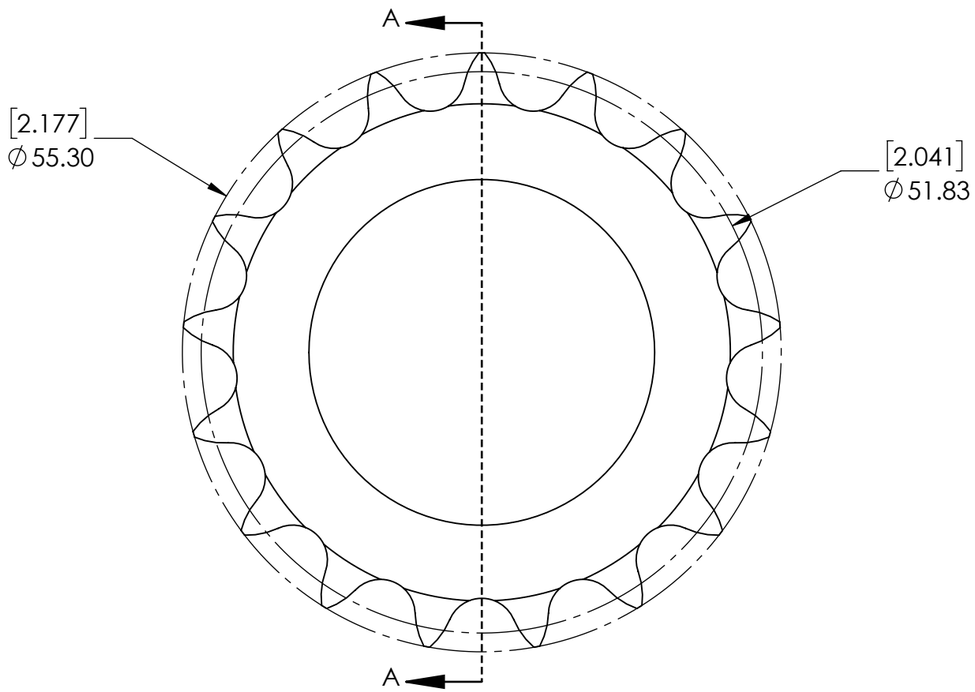

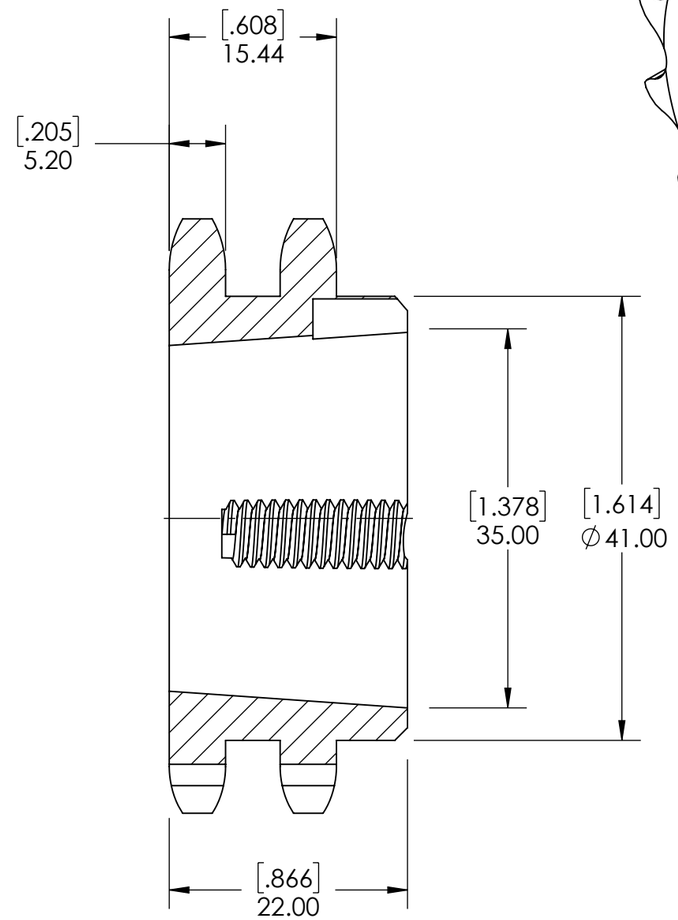

SECTION A-A

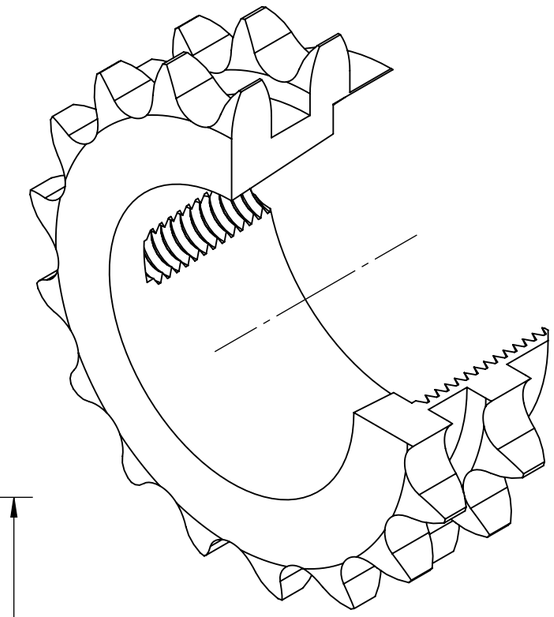

SPROCKETS SPECIFICATIONS	
UNITS	mm [INCH]
CHAIN SIZE	06B
PITCH	9.525 mm
INNER WIDTH	5.72 mm
ROLLER DIA.	6.35 mm
TOOTH WIDTH	5.20 mm
NUMBER OF TEETH	17
HUB STYLE	B
BORE TYPE	FOR TAPER BUSHING
BUSHING NUMBER	1008

SOLVE INDUSTRIAL MOTION GROUP

SIZE B

PTI

DWG. NO.

WEIGHT	0.25 LBS	
MATERIAL	STEEL	
COATING	BLACK OXIDE	
DRAWN	SEC	07/30/2025
CHECKED	EG	07/30/2025
APPROVED		
THIRD ANGLE PROJECTION		

PROPRIETARY AND CONFIDENTIAL

THE INFORMATION CONTAINED IN THIS DRAWING IS THE SOLE PROPERTY OF Solve IMG. ANY REPRODUCTION IN PART OR AS A WHOLE WITHOUT THE WRITTEN PERMISSION OF Solve IMG IS PROHIBITED.

DATE	BY	REVISION DESCRIPTION	REV

ITEM DESCRIPTION:

06B-2-17TL-1008

SCALE 1:1

REV -